PROJECT MANUAL

PROJECT NAME AND LOCATION:

DECK REPLACEMENT **Contract Number: DW2402831**
CARRINGTON APARTMENTS BUILDING E

TABLE OF CONTENTS

02 Invitation to Bid (1 Page)

03 Specifications (18 Pages)

04 Plans (9 Sheets)

05 Instruction to Bidders (6 Pages)

06 General Conditions (15 Pages)

07 Bid Form & Bidder Information (4 Pages) – ***Return with Bid***

08 Sample Contract Form (1 Page)

09 Sample Certificate of Insurance (2 Pages)

10 Hazardous Material Report dated December 9, 2022 (78 Pages)

INVITATION TO BID

King County Housing Authority (KCHA) will accept bids from qualified general contractors to furnish labor, materials and necessary equipment to perform the following:

SCOPE OF WORK: Work includes, but is not limited to, the replacement of 8 exterior decks, and other tasks as described in the bid documents.

PROJECT MANUAL DISTRIBUTION:

Address: King County Housing Authority, 600 Andover Park, Seattle, WA 98188

Distribution: * **Documents are available for download on KCHA's website at http://www.kcha.org/business/construction/open/**

PRE-BID CONFERENCE:

Date and Time: August 22, 2025 at 11:00 A.M.

Jobsite Address: Carrington Apartments, 2501 148th Ave SE, Bellevue, WA 98007.

In Addition: Contractors are strongly encouraged to attend the Pre-Bid Conference. Failure to attend the Conference will not relieve the Contractor of any responsibility for information provided at that time. Bidders must have a current certificate of registration as a contractor for the last three years under the same name and have completed the required L&I training.

For Questions: Questions pertaining to the bid are to be sent via email to MichelleJ@kcha.org no later than seven (7) calendar days prior to bid due date. All responses shall be in the form of Addenda.

Posting: Addenda will be posted on KCHA's website.

BIDS ARE DUE:

Time: **11:00 A.M.**

Date: **September 4, 2025**

Address: King County Housing Authority, 600 Andover Park West, Tukwila, WA 98188

Submittal Process: * Bids may be sent via email to MichelleJ@kcha.org or mail to the above address Attn.: Michelle Jackson

Process: All Bids must be received by KCHA no later than the above due date and time. No Bids will be accepted after that date and time.

BID GUARANTEE: Not Required.

PERFORMANCE AND PAYMENT BONDS: As a condition of award Performance and Payment bonds for 100% of the Contract Award Amount shall be furnished for the Work.

KCHA is an Equal Employment Opportunity Employer and strongly encourages minority-owned and women-owned businesses, socially and economically disadvantaged businesses, and small businesses to submit bids or to participate as subcontractors and suppliers on KCHA Contracts.

KCHA reserves the right to reject any or all bids or to waive any informality in the bidding. No bid shall be withdrawn for a period of 60 calendar days subsequent to the opening of the bids without the written consent of KCHA.

CONTACT PERSON: Michelle Jackson at MichelleJ@kcha.org

SECTION 01100 - SUMMARY

PART 1 - GENERAL

1.1 WORK COVERED BY CONTRACT DOCUMENTS

A. Project Identification: Deck Replacement

1. Project Location: Carrington Apartments, 2501 148th Avenue SE, Bellevue, WA 98007

a. Building E – 8 units

B. The Work consists of, but is not limited to:

1. Replacement of (8) exterior decks to match newly remodeled decks.
2. Demolition:
   a. Demolish and dispose of ground floor patio concrete slab on grade.
   b. Demolish and dispose of 4x4 post and double 2x beams.
   c. Demolish and dispose of upper floor deck structural components (joist, rim sheathing).
   d. Demolish and dispose of existing railings.
   e. Remove and re-use siding as required for a proper new deck and flashing.
3. Concrete:
   a. Install (2) new footings and plinths at each deck per structural plans.
   b. Install new 4” concrete slab on grade with 6x6 – W2.1 x 2.1 W.W.M, U.O.N. per structural plans.
4. Metal
   a. Install (2) new HSS 4x4x1/4 column.
   b. Install anchorage, hangers, and fasteners per structural plans.
   c. Install new HSS railings per structural plans. Contractor to submit product info.
   d. Install (2) Simpson DTT2Z Ties at ea. railing vert.
5. Wood
   a. Install double 2x10 PT rim per structural plans.
   b. Install 6x10 PT beam per structural plans.
   c. Install 2x10 PT joist at 16” oc. Per structural plans.
   d. Install ¾” CDX T&G deck sheathing w/ blocking per structural plans.
6. Finishes
   a. Deck Coating – Rhino Extreme, Rhino Lining of Auburn 253-735-1960
      1) Epoxy primer coat.
      2) Spray applied waterproof membrane.
      3) Extreme appx 80-10 mill thick
      4) Base coat with quartz embedded.
      5) UV Topcoat (color to match existing, contractor to submit color samples to consultant.
   b. Paint siding and trim damaged or replaced during upgrade to match existing.

C. Scope of Work.
1. Install temporary shoring and safe passage for each deck location.
2. Install temporary protection to surrounding materials and landscape as required to protect during construction.
3. Demolish concrete slab on grade (including concrete step) and remove waste off site.
4. Remove existing posts and beams,
5. Remove and dispose of exiting railing.

6. Remove and safely store for re-use siding approx. 18” from deck surface.
7. Demolish deck sheathing with deck coating and associated flashings.
8. Demolish and dispose of all structural members of upper deck.
9. Form, set and pour new footing and plinths for new HSS post. Contractor to ensure anchor bolts are embed 8” in plinth/footing.
10. Pour new 4” exposed aggregate concrete slab on grade.
11. Install HSS post and 2x12 beams and 2x10 rims.
12. Frame deck structure per structural plans.
13. Install all flashings and drip edge for deck waterproofing.
14. Install liquid applied deck coating.
15. Re-install siding removed during demo of the deck.
16. Install new HSS deck railings per specs. Contractor to submit railing option.
17. Paint siding and trim to match existing. Contractor to submit color samples for approval.

1.2 WORK SEQUENCE

A. The Work shall be completed in 100 calendar days from the date of Notice to Proceed.

B. The contractor will submit a written schedule outlining dates and duration of the job, including:

1. Construction start date.
2. Schedule for work in each location and scope
3. Anticipated final completion date.

1.3 LIQUIDATED DAMAGES

A. Liquidated damages will be assessed for each calendar day that the Contractor exceeds the time for completion in the amount of $250.

1.4 WORK RESTRICTIONS

A. USE OF THE PREMISES

1. Use of Site: Limit use of premises to work areas. Do not disturb portions of site beyond areas in which the Work is indicated.

a. Owner Occupancy: Allow for resident occupancy of site. The owner will occupy the site and existing building during the entire construction period. Cooperate with Owner during construction operations to minimize conflicts and facilitate resident usage.

1) Ensure access to egress for residence throughout construction.
2) Temporary egress shall be efficient for safe usage.

b. Driveways and Entrances: Keep driveways and entrances serving premises clear and available to residents and emergency vehicles at all times. Do not use these areas for parking or storage of materials.

2. Use of Existing Building: Maintain existing building in a weathertight condition throughout construction period. Repair damage caused by construction operations. Protect property, the buildings, and occupants during construction period.

B. OCCUPANCY REQUIREMENTS

1. Full Owner Occupancy: Owner and tenants will occupy site and existing building during entire construction period. Cooperate with Owner during construction operations to minimize conflicts and facilitate resident usage.

2. Barricades, Warning Signs and Lights: Comply with standards and code requirements for erection of structurally adequate barricades. Paint with appropriate colors, graphics and warning signs to inform personnel and the public of the hazard being protected against.

3. Use of Owner's existing electric power service will be permitted, as long as equipment is maintained in a condition acceptable to Owner.

4. Four parking spaces shall be available to the contractor for storage containers and parking. Do not park in marked tenant spaces.

1.5 PERMITS

A. Owner has secured the Building Permit. Contractor is responsible for obtaining and paying for all other necessary permits and for the coordination of all required inspections.

1.6 CONTRACT MODIFICATION PROCEDURES

A. Owner-Initiated Proposal Requests: Architect will issue a detailed description of proposed changes in the Work that may require adjustment to the Contract Sum or the Contract Time. If necessary, the description will include supplemental or revised Drawings and Specifications.

B. Contractor-Initiated Proposals: If latent or unforeseen conditions require modifications to the Contract, Contractor may propose changes by submitting a request for a change.

C. Construction Change Directive: Owner may issue a Construction Change Directive instructing the Contractor to proceed with a change in the Work, for subsequent inclusion in a Change Order.

D. Documentation: Maintain detailed records required for a change order to be approved and provide evidence of the following:

1. Wage Rates

2. Hours worked for each trade.

3. Materials

4. Equipment

E. Do not perform change order Work without approval of the Owner. Work performed without approval will not be compensated.

1.7 PAYMENT PROCEDURES

A. Coordinate preparation of the Schedule of Values with preparation of Contractor's Construction Schedule.

1. SOV to include Labor and Material cost for all main components of construction. SOV to be submitted to KCHA Senior PM for approval prior to work start date. SOV should include but not be limited to:
   a. Mobilization
   b. Demolition
   c. Framing
   d. Concrete
   e. WRB, Siding & Trim
   f. Deck Coatings
   g. Paint

B. Each Application for Payment shall be consistent with previous applications and payments.

C. Entries shall match data on the Schedule of Values and Contractor's Construction Schedule. Use updated schedules if revisions were made.

D. Waivers of Lien: With each Application for Payment, submit conditional waivers lien from every entity who is lawfully entitled to file a lien arising out of the Contract and related to the Work covered by the payment.

1. Submit partial waivers on each item for amount requested, before deduction for retainage, on each item.

2. When an application shows completion of an item, submit final or full waivers.

3. Owner reserves the right to designate which entities involved in the Work must submit waivers.

a. Submit final Application for Payment with or proceeded by final waivers from every entity involved with performance of the Work covered by the application who is lawfully entitled to a line.

E. Final Payment Application: Submit final Application for Payment with releases and close out supporting documentation.

1.8 PROJECT MEETINGS

A. Preconstruction Conference: Schedule a preconstruction conference before starting construction, at a time convenient to the Owner, but no later than 7 days after execution of the Agreement.

B. Progress Meetings: Conduct progress meetings at weekly intervals.

1.9 SUBMITTALS

A. Subcontract list. Prepare written information that demonstrates capabilities and experience of firm or persons.

B. Follow Washington Industrial Safety and Health Act (WISHA) regional directives and provide a site-specific safety program that will require an accident prevention and hazard analysis plan for the contractor and each subcontractor on the work site. The Contractor shall submit a site-specific Accident Prevention Program (APP) to the Owner’s representative prior to the initial scheduled construction meeting.

C. Submittal package showing all materials to be used on-site. Included in material submittal should be manufacturer's installation instructions, SDS, specifications and shop drawings as required. Submittals to be approved by architect prior to installation.

1. Material Submittal shall be in standard industry format with transmittal page. Submittals shall have specific designation of material/ product to be used and a general description of use.

1.10 TEMPORARY FACILITIES

A. Sanitary Facilities: Provide temporary toilets, wash facilities, and drinking-water fixtures. Comply with regulations and health codes for type, number, location, operation, and maintenance of fixtures and facilities.

B. Use of Owner's existing electric power service will not be permitted.

C. Four parking spaces and an additional lay down area shall be available to the contractor for storage containers and parking. Do not park in marked tenant spaces.

1.11 SUBSTITUTIONS

A. Substitutions: Changes in products, materials, equipment, and methods of construction from those required by the Contract Documents and proposed by Contractor.

B. Substitution requests may be submitted and shall include:

1. Shop drawings showing dimensions.

2. Product Data, including descriptions of products and fabrication and installation procedures.

3. Data showing how products meet the specifications.

1.12 CONSTRUCTION WASTE MANAGEMENT

A. Regulatory Requirements: Conduct construction waste management activities in accordance with State of Washington RCW 39.04.13, and all other applicable laws and ordinances.

B. Performance Requirements

1. General: Where possible divert CDL waste from the landfill by one, or a combination of the following activities: Salvage, Reuse, Source-Separated CDL Recycling, Co-mingled CDL Recycling.

C. Removal of Construction Waste Management

1. Remove CDL waste materials from the project site on a regular basis. Do not allow CDL waste to accumulate on-site.

2. Transport CDL waste materials off Owner's property and legally dispose of them.

3. Burning of CDL waste is not permitted.

1.13 EXECUTION REQUIREMENTS

A. General: Clean Project site and work areas daily, including common areas. Coordinate progress cleaning for joint-use areas where more than one installer has worked. Enforce requirements strictly. Dispose of materials lawfully.

1.14 CUTTING AND PATCHING

A. Quality Assurance

1. Structural Elements: Do not cut and patch structural elements in a manner that could change their load-carrying capacity or load-deflection ratio.

2. Visual Requirements: Do not cut and patch construction in a manner that results in visual evidence of cutting and patching. Do not cut and patch construction exposed on the exterior or in occupied spaces in a manner that would, in Owner's opinion, reduce the building's aesthetic qualities. Remove and replace construction that has been cut and patched in a visually unsatisfactory manner.

B. Performance

1. Cutting: Cut existing construction by sawing, drilling, breaking, chipping, grinding, and similar operations, including excavation, using methods least likely to damage elements retained or adjoining construction. If possible, review proposed procedures with original Installer; comply with original Installer's written recommendations.

2. Patching: Patch construction by filling, repairing, refinishing, closing up, and similar operations following performance of other Work. Patch with durable seams that are as invisible as possible. Provide materials and comply with installation requirements specified in other Sections of these Specifications.

    a. Exposed Finishes: Restore exposed finishes of patched areas and extend finish restoration into retained adjoining construction in a manner that will eliminate evidence of patching and refinishing.

    b. Exterior Building Enclosure: Patch components in a manner that restores enclosure to a weathertight condition and all vapor barrier items are re-installed per manufacturer's requirements.

1.15 CLOSEOUT PROCEDURES

A. General: Provide final cleaning. Conduct cleaning and waste-removal operations to comply with local laws and ordinances and Federal and local environmental and antipollution regulations.

1. Prior to acceptance of the work at each building, clean project site, yard, and grounds, in areas disturbed by construction activities, including landscape development areas, of rubbish, waste material, litter, and other foreign substances.

B. Prior to final acceptance and final payment, Contractor shall submit a written warranty covering labor and materials for a period of two (2) years from final completion.

C. Provide complete AS Built package detailing the manner and condition of materials installed. To include but not limited to; shop drawings of structural items installed and connection components. List of materials installed and their OM documents.

PART 2 - PRODUCTS (not used)

PART 3 - EXECUTION (not used)

END OF SECTION 01100

SECTION 01732 - SELECTIVE DEMOLITION

PART 1 - GENERAL

1.1 SUMMARY

A. This Section includes demolition, and removal and replacement.

1. Selected portions of a building or structure to be demolished include but are not limited to:

a. Structural framing.

b. Exterior siding and trim as required for demo of existing decks and proper connections for new construction, porch structures and decks.

c. Remove sliding glass door.

d. Concrete patio slab.

e. Upper unit deck structure and waterproof membrane.

f. Railings.

g. All other items necessary to perform the specified work.

1.2 MATERIALS OWNERSHIP

A. Except for items or materials indicated to be reused, salvaged, reinstalled, or otherwise indicated to remain Owner's property, demolished materials shall become Contractor's property and shall be removed from Project site.

1.3 PROJECT CONDITIONS

A. Owner will occupy portions of the building near demolition area. Conduct demolition so Owner's operations will not be disrupted. Provide not less than 72-hours' notice to Owner of activities that will affect Owner's operations.

B. Maintain access to existing walkways, corridors, and other adjacent occupied or used facilities.

1. Do not close or obstruct walkways, corridors, or other occupied or used facilities without written permission from authorities having jurisdiction.

C. Owner assumes no responsibility for condition of areas to be selectively demolished.

1. Conditions existing at time of inspection for bidding purpose will be maintained by Owner as far as practical.

2. If Contractor comes across materials that are suspected of containing hazardous materials, do not disturb and immediately notify Owner. Hazardous materials will be removed by Owner under a separate contract.

D. Storage or sale of removed items or materials on-site will not be permitted.

E. Utility Service: Maintain existing utilities and protect them against damage during selective demolition operations.

PART 2 - PRODUCTS

2.1 REPAIR MATERIALS

A. Use repair materials identical to existing materials.

1. If identical materials are unavailable or cannot be used for exposed surfaces, use materials that visually match existing adjacent surfaces to the fullest extent possible.
2. Use materials whose installed performance equals or surpasses that of existing materials.
3. Refer to General Summary, section 1.11, Substitutions.

PART 3 - EXECUTION

3.1 EXAMINATION.

A. Survey existing conditions and correlate with requirements indicated to determine extent of selective demolition required.

B. Document existing conditions as the selective demolition progresses and prior to repairs and cover.

3.2 UTILITY SERVICES

A. Existing Utilities: Maintain services and protect them against damage during selective demolition operations.

3.3 PREPARATION

A. Site Access and Temporary Controls: Conduct selective demolition and debris-removal operations to ensure minimum interference with roads, streets, walks, walkways, and other adjacent occupied and used facilities.

1. Do not close or obstruct streets, walks, walkways, or other adjacent occupied or used facilities without permission from Owner and authorities having jurisdiction. Provide alternate routes around closed or obstructed traffic paths if required by governing regulations.
2. Erect temporary protection, such as walks, egress, fences, railings, canopies, and covered passageways, where required by authorities having jurisdiction.
3. Protect existing site improvements, appurtenances, and landscaping to remain.

3.4 SELECTIVE DEMOLITION

A. General: Demolish and remove existing construction only to the extent required by new construction and as indicated. Use methods required to complete the Work within limitations of governing regulations.

B. Removed and Reinstalled Items: Remove and re-install items as soon as possible to prevent unsafe conditions.

3.5 DISPOSAL OF DEMOLISHED MATERIALS

A. General: Promptly dispose of demolished materials. Do not allow demolished materials to accumulate on-site.

B. Burning: Do not burn demolished materials.

C. Disposal: Transport demolished materials off Owner's property and legally dispose of them.

END OF SECTION 01732

SECTION 07462 - FIBER CEMENT SIDING

PART 1 - GENERAL

1.1 SECTION INCLUDES

A. Fiber Cement Siding including Trim, Flashing and Accessories.

B. Trim: Vertical, Horizontal, Window/Door, Soffits, Fascia, Barge and Accessories.

1.2 SUBMITTALS

A. Product Data: Manufacturer's data sheets on each product to be used, including:

1. Preparation instructions and recommendations.

2. Storage and handling requirements and recommendations.

3. Installation methods, including nailing patterns.

B. Siding manufacturer's requirements for vapor retarders, primer, paint, etc.

1.3 QUALITY ASSURANCE

A. Installer Qualifications: Provide an installer with not less than three years of experience with products similar to those specified.

1.4 DELIVERY, STORAGE, AND HANDLING

A. Comply with manufacturers’ instructions to avoid damage to products.

B. Store products off the ground, on a flat surface, and under a roof or separate waterproof covering.

1. Stacking materials may result in damage to products or finish.

1.5 PROJECT CONDITIONS

A. Maintain environmental conditions (temperature, humidity, and ventilation) within limits recommended by manufacturers for optimum results. Do not install products under environmental conditions outside manufacturer's absolute limits.

1.6 WARRANTY

A. Register manufacturer's warranty, made out in Owner's name, with copy to Owner.

B. Workmanship Warranty: Application warranty for 2 years.

PART 2 - PRODUCTS

2.1 MANUFACTURERS

A. James Hardie Plank Select Cedarmill Lap Siding & Trim (primed for paint).

2.2 FIBER CEMENT PANEL SIDING

A. Hardie Lap Siding, Select Cedarmill surface, factory primed for field finishing. Plank Lap Siding 6-1/4” width, 5/16th” thick. Exposed fasteners as approved by manufacturer. Align fasteners with structural framing for secure connections as approved by Manufacturer.

B. ACCESSORIES

C. Fasteners: Fasteners as recommended by Manufacturer for wind speed and exposure category based on ICC Evaluation Service, Inc. (ICC-ES) Report HB.

1) Galvanized Nails: James Hardie proprietary unobtrusive finishing nail, of size (depth of penetration) and strength to securely and rigidly retain the work and as required by the siding manufacturer in printed instructions.

D. Building Paper, tape, and sealant: To match existing.

2.3 FINISHES

A. Factory Primer: Provide factory applied universal primer.

1. Primer: Factory applied.

B. Topcoat: - Refer to Section 09911. Finish Paint: As specified in Section 09911.

PART 3 - EXECUTION

3.1 DEMOLITION

A. General: Demolish and dispose offsite existing construction only to the extent required by new construction and as indicated. Use methods required to complete the Work within limitations of governing regulations.

B. Removed, store and reinstalled all items not identified for replacement.

3.2 EXAMINATION

A. Do not begin installation until substrates have been properly prepared, examined and approved for coverage.

3.3 PREPARATION

A. Clean surfaces thoroughly prior to installation.

B. Prepare surfaces using the methods recommended by the manufacturer for achieving the best result for the substrate under the project conditions.

C. Install moisture barrier with penetration and junction flashing and sealed.

1. Use self-adhesive flashing tape to secure joints and laps.

2. Lap barrier over flashing and tape securely.

3. Tape all penetrations.

3.4 INSTALLATION – LAP SIDING

A. Install materials in strict accordance with manufacturer's installation instructions and recommendations.

B. Follow manufacturer recommended installations. See 03-HZ10 HardiePlank Lap Siding Installation for details on weatherization measures and siding installation details.

C. Maintain clearance between siding and adjacent finished grade.

D. Remove soils and organic debris to provide minimum 6” clearance to bottom of siding.

E. Locate all vertical joints at stud locations and with solid backing.

3.5 INSTALLATION - TRIM

A. Install all trim true and straight with no distortions. Shim as required with concealed shims. Install level and plumb to a tolerance of 1/8 inch in 96 inches.

B. Install trim in longest lengths possible.

C. Clean trim on exposed and semi exposed surfaces and leave ready for paint.

3.6 ACCESSORIES

A. Install moisture barrier and lap over flashing and tape.

1. Tape all joints and seal around penetrations.

B. Install trim materials as indicated.

C. Set all nails in trim boards and siding as per manufacturer’s instructions.

D. Caulk siding joints in strict accordance with manufacturer's installation instructions.

3.7 PROTECTION

A. Protect installed products until completion of project.

B. Touch-up, repair or replace damaged products before Substantial Completion.

END OF SECTION 07462

SECTION 07620 - SHEET METAL FLASHING AND TRIM

PART 1 - GENERAL

1.1 SUMMARY

A. This Section includes the following:

1. Sheet metal flashing.

1.2 SUBMITTALS

A. Product Data: For each product indicated.

1.3 QUALITY ASSURANCE

A. Sheet Metal Flashing and Trim Standard: Comply with SMACNA's "Architectural Sheet Metal Manual." Conform to dimensions and profiles shown unless more stringent requirements are indicated.

PART 2 - PRODUCTS

2.1 FLASHING

A. 24-gauge min. zinc galvanized complying with ASTM A-93 coating not less than 1.50-ounce zinc coating per sq. ft. (total for both sides), with pre-painted finishes on both sides. (“Kynar” bronze color each side).

B. Fabricate sheet metal flashing and trim to comply with recommendations in SMACNA's "Architectural Sheet Metal Manual" that apply to design, dimensions, metal, and other characteristics of item.

1. Minimum pre-primed 24 gauge hot-dipped galvanized steel sheet, or aluminum.

a. Include folded hem on all exposed flashing.

2. Window and door flashing.

3. Bellyband and blocking flashing.

4. Joint flashing plate.

5. Fasteners: Hot-dipped galvanized or stainless steel as required to penetrate minimum 1-1/4 inch into solid backing.

PART 3 - EXECUTION

3.1 FLASHING INSTALLATION

A. General: Install sheet metal roof flashing and trim to comply with performance requirements and SMACNA's "Architectural Sheet Metal Manual." Provide concealed fasteners where possible, set units true to line, and level as indicated. Install work with laps, joints, and seams that will be permanently watertight.

END OF SECTION 07620

SECTION 09911 - EXTERIOR PAINTS AND COATINGS

PART 4 - GENERAL

4.1 SECTION INCLUDES

A. Surface preparation and field painting of exposed exterior items and surfaces.

1. Wood
   a. Deck framing,
   b. Vertical wood trim.
   c. Any previously painted wood
2. Fiber Cement Siding & Trim
3. Metal
   a. All previously painted metal
4. Deck Coatings
   a. Coatings for all upper unit decks

REFERENCES

B. ASTM D 16 - Standard Terminology Relating to Paint, Varnish, Lacquer, and Related Products.

C. ASTM D 3359 - Standard Test Methods for Measuring Adhesion by Tape Test.

D. ASTM D 1653 - Standard Test Methods for Water Vapor Transmission of Organic Coating Films.

E. ASTM E-96 - Standard Test Methods for Water Vapor Transmission of Materials.

F. SSPC, The Society for Protective Coatings - Web Site http:www.sspc.org:

1. SSPC-SP1 Solvent Cleaning.
2. SSPC-SP2 Hand Tool Cleaning.
3. SSPC-SP3 Power Tool Cleaning.
4. SSPC-SP7 Brush-Off Blast Cleaning.

G. PDCA Paint and Decorating Contractors of America - Web Site http://www.pdca.org:

1. PDCA Standards P1 through P15

4.2 SUBMITTALS

A. Product Data: Manufacturer's data sheets on each product to be used, including:

1. Preparation instructions and recommendations.
2. Storage and handling requirements and recommendations.
3. Installation methods.

B. Verification Samples: For each finish product specified, two samples, minimum size 6 inches square, representing actual product, color, and patterns.

4.3 QUALITY ASSURANCE

A. Manufacturer Qualifications: All primary products specified in this section will be supplied by a single manufacturer with a minimum of ten years' experience.

B. Installer Qualifications: All products listed in this section are to be installed by a single installer with a minimum of five years demonstrated experience in installing finishes and coatings of the same type and scope as specified.

4.4 DELIVERY, STORAGE, AND HANDLING

A. Store products in manufacturer's unopened packaging until ready for installation.

B. Store and dispose of solvent-based materials, and materials used with solvent-based materials, in accordance with requirements of local authorities having jurisdiction.

C. Take special safety precautions against hazards from toxic and flammable materials.

D. Place paint and solvent contaminated cloths and materials, subject to spontaneous combustion, in containers and remove from job site each day.

E. Keep open flame, electrical and static spark, and other ignition sources from flammable vapors and materials at all times.

4.5 PROJECT CONDITIONS

A. Maintain environmental conditions (temperature, humidity, and ventilation) within limits recommended by manufacturers for optimum results. Do not install products under environmental conditions outside manufacturer's recommended limits.

B. Post "WET PAINT" signs during application and curing of all coatings that may be accessed by other trades or the public.

C. Post "NO SMOKING" signs during application and curing of solvent-based materials.

4.6 COORDINATION

A. Coordinate Work with other operations and installation of finished materials to avoid damage to installed materials.

B. Do not apply coating materials until moisture or dust-producing work or other appearance or performance impairing construction activities have been completed.

4.7 WARRANTY

A. At project closeout, provide to Owner an executed copy of the manufacturer's standard limited warranty against manufacturing defect, outlining its terms, conditions, and exclusions from coverage.

1. Include final written approval from paint manufacturer's representative that the product has been applied in accordance with the manufacturer's instructions as required to obtain manufacturer's standard limited warranty.

PART 5 - PRODUCTS

5.1 MATERIALS

A. Materials selected for coating systems for each type of surface shall be the product of a single manufacturer.

B. Do not thin finish coats without the manufacturer's approval.

C. Unsuitability of specified products: Claims concerning the unsuitability of any material specified or inability to satisfactorily produce the work will not be entertained, unless such claim is made in writing to Owner before work is started.

D. Apply additional coats at no additional cost if necessary to completely hide base materials, produce uniform color, and provide satisfactory finishing result.

5.2 PAINT MANUFACTURERS

A. Acceptable Manufacturer: Base Bid Specifications

B. The Sherwin-Williams Company

1. Representative – Andrew Dickson
Phone: 253-258-1560
Email: andrew.dickson@sherwin.com

C. Acceptable Manufacturer: Behr Paint Company, Santa Ana, California 92705.

D. 1. Regional Accounts Manager: Jill Marlatt, 425.761.9077, jmarlatt@behr.com

5.3 DECK COATING

A. Armorthane – ArmorThane STS-300

B. Rhino Lining – Rhino Lining TuffGrip

C. Include primer as recommended by the manufacturer selected.

PART 6 - EXECUTION

6.1 EXAMINATION

A. Examine surfaces scheduled to receive paint and finishes for conditions that will adversely affect execution, permanence or quality of work and which cannot be put into acceptable condition through preparatory work as included in Article 3.2 "Preparation ". Notify Owner in writing of any defects or conditions which will prevent a satisfactory installation.

B. Examine surfaces scheduled to be finished prior to commencement of work. Report any condition that may affect proper application.

C. Maximum Moisture Content of Substrates: When measured with an electronic moisture meter as follows:

1. Concrete: 12 percent

2. Portland Cement Plaster and Stucco: 12 percent

3. Masonry (Clay and CMU): 12 percent

4. Wood: 15 percent

5. Gypsum Board: 12 percent

D. Verify suitability of substrates, including surface conditions and compatibility with existing finishes and primers.

E. Proceed with surface preparation and coating application only after unsatisfactory conditions have been corrected.

1. Application of coating is construed as acceptance of surfaces and conditions.

6.2 PREPARATION

A. Clean surfaces thoroughly prior to coating application.

B. Masking: All masking over windows in occupied units shall be removed at the end of each workday.

C. Do not start work until surfaces to be finished are in proper condition to produce finished surfaces of uniform, satisfactory appearance.

D. Stains and Marks: Remove completely, if possible, using materials and methods recommended by coating manufacturer; cover stains and marks which cannot be completely removed with isolating primer or sealer recommended by coating manufacturer to prevent bleed-through.

E. Remove Mildew, Algae, and Fungus using materials and methods recommended by coating manufacturers.

F. Remove dust and loose particulate matter from surfaces to receive coatings immediately prior to coating application.

G. Remove or protect adjacent hardware, electrical equipment plates, mechanical grilles and louvers, lighting fixture trim, fabric canopies, and other items not indicated to receive coatings.

H. Move or protect equipment and fixtures adjacent to surfaces indicated to receive coatings to allow application of coatings.

I. Protect adjacent surfaces not indicated to receive coatings.

J. Prepare surfaces in accordance with manufacturer's instructions for specified coatings and indicated materials, using only methods and materials recommended by coating manufacturer.

6.3 SURFACE PREPARATION

A. All surfaces to be painted shall be pressure washed.

B. Mildew

1. A solution of 1-part Jomax house cleaner and mildew killer concentrate and 1 part water will be applied by a low-pressure system such as:

   a. Gallon pressure sprayer

   b. Juice box

   c. Very low-pressure airless sprayer with little or no “bounce back.”

2. All surfaces will be wetted with this mildewcide solution, not just the most easily accessible. Do not allow this solution to dry before rinsing thoroughly with clean water.

C. Metal: Pressure wash and then sand, wire brush, or scrape as necessary to remove excess rust scale and loose/peeling paint not removed initial cleaning. Prime all bare metal as soon as possible after preparation.

D. All other surfaces: Pressure wash and scrape to remove dirt contaminants, dust, and loose/peeling paint to provide a smooth surface for paint application. Hammer all protruding nail heads flush with surface before painting. Prime all bare wood areas before applying the finish coat. Caulk any open miters or cracks in surface.

E. Any debris or chemical residue on windows due to power wash operation will be removed by thoroughly rinsing the windows and surrounding trim. Due care is to be exercised around window seals to prevent damage. Protect all vehicles, other surfaces or plants which will not be receiving

paint, but which might be harmed by chemical exposure. Temporary coverings are normally the preferred method.

F. All washed surfaces will have at least two days of continuous drying time (no rain). Surfaces to be painted must have no more than 13% moisture content before priming and painting commences. Washing one day and painting the next is not acceptable.

G. The Owner's Representative and paint manufacturer's representative shall inspect preparation prior to the application of paint finishes. Contractor will rework surfaces not properly prepared to receive paint finishes to the satisfaction of the either.

6.4 APPLICATION - GENERAL

A. Apply each coat to uniform coating thickness in accordance with manufacturer's instructions, not exceeding manufacturer's specified maximum spread rate for indicated surface; thins, brush marks, roller marks, orange-peel, or other application imperfections are not permitted.

B. Allow the manufacturer's specified drying time, and ensure correct coating adhesion, for each coat before applying the next coat.

C. Inspect each coat before applying the next coat; touch-up surface imperfections with coating material, feathering, and sanding if required; touch-up areas to achieve flat, uniform surface without surface defects visible from 5 feet.

D. Do not apply succeeding coat until Owner and paint manufacturer's representative has approved previous coat; only approved coats will be considered in determining number of coats applied.

E. Remove dust and other foreign materials from substrate immediately prior to applying each coat.

F. Where coating application abuts other materials or other coating colors, terminate coating with a clean sharp termination line without coating overlap.

G. Where color changes occur between adjoining spaces, through framed openings that are of same color as adjoining surfaces, change color at outside top corner nearest to face of closed door.

H. Re-prepare and re-coat unsatisfactory finishes; refinish entire area to corners or other natural terminations.

6.5 DECK COATINGS

A. Deck coatings shall be installed in accordance with the manufacturer's written instructions.

B. Apply primer and topcoats as directed by the manufacturer's representative.

C. Apply thickness as recommended for plywood decking.

6.6 CLEANING

A. Clean excess coating materials, and coating materials deposited on surfaces not indicated to receive coatings, as construction activities of this section progress; do not allow them to dry.

B. Re-install hardware, electrical equipment plates, mechanical grilles and louvers, lighting fixture trim, and other items that have been removed to protect from contact with coatings.

C. Reconnect equipment adjacent to surfaces indicated to receive coatings.

D. Relocate to original position equipment and fixtures that have been moved to allow application of coatings.

E. Remove protective materials.

6.7 PROTECTION

A. Protect completed coating applications from damage by subsequent construction activities.

B. Repair to Owner's acceptance coatings damaged by subsequent construction activities. Where repairs cannot be made to Owner's acceptance, re-apply finish coating to nearest adjacent change of surface plane, in both horizontal and vertical directions.

6.8 PAINT SCHEDULE

A. Finish surfaces in accordance with schedule. Catalog names and numbers refer to products as manufactured or distributed by the Behr Paint Company, Santa Ana, California 92705, except as otherwise specified by Architect.

B. Provide paint finishes of even, uniform color, free from cloudy or mottled appearance. Properly correct non-complying work to satisfaction of Owner’s representative and representative of the Behr Paint Company.

C. Some colors, especially accent colors, may require multiple finish coats for adequate coverage and opacity.

D. The specified number of primer and finish coats is minimum acceptable. If full coverage and opacity is not obtained with specified number of coats, apply additional coats as necessary to produce required finish.

6.9 COLORS

A. Colors shall be selected from mockups and shall consist of a field color, trim color, and door color.

END OF SECTION 09911

GENERAL NOTES

1. Contractor shall comply with the building codes as noted on drawings.
2. Contractor shall be responsible for providing all work and materials in accordance with all applicable city, county, and local building and fire codes as required.
3. Contractor shall obtain and pay for all necessary permits other than the building permit. Additionally, pay for all other charges, fees or costs associated with the work and charged by the municipality, utilities, or private companies
4. Contractor shall visit job site and verify all existing conditions and field dimensions prior to commencing work. Notify Architect if site conditions and/or Building Department require any modifications to these drawings.
5. Contractor is responsible for maintaining a safe and clean construction site.
6. Contractor is responsible for providing temporary bracing as required until all permanent structural assemblies and connections are secured.
7. Contractor shall establish an agreement with the Owner regarding allowable days and hours of work. Contractor shall not permit any construction activity to commence, or allow employees to cause noise on site, outside of the agreed-upon work periods.
8. Contractor shall coordinate all equipment or systems to be salvaged and given to the Owner, with the Owner. The Owner shall direct the Contractor as to the location of a storage area for salvaged items. The Contractor will be responsible for removing from the building and the construction site all construction debris and/or items not retained by the owner's representative.
9. No storage or use of flammable or combustible liquids, torch cutting or welding operations, open flame work, grinding that produces sparks, roofing operations, or use of flammable gas for temporary heating or drying shall be conducted on any construction site without first having obtained a specific permit from the City of Bellevue Fire Department for these hazardous activities. This includes demolition work. Please call Fire Department permit information and application.
10. Egress, separation, fire protection systems, and emergency access shall meet the requirements of 2021 International Fire Code (IFC) chapter 33 during construction. Contractor materials and activities shall not block any exit, restrict emergency access, or impair fire separation in any building while the building is occupied. This includes demolition work and also applies to neighboring areas, spaces, and buildings. 1
11. The existing fire safety (fire alarm) system(s) shall remain online in the building(s) during the remediation project.
12. Deferred submittals may be required for any modification of fire alarm system(s). Any and all proposed modifications must meet NFPA 72 and Bellevue Municipal Code requirements.
13. If any of the fire safety (fire alarm) systems are offline during the course of the project, then a fire watch shall be posted while the system(s) are offline. 1

EXISTING BUILDING CODE

Existing Building Code Compliance: The work shall be in accordance with 2021 International Existing Building Code (IEBC), Chapter 7 & 8.

CONSTRUCTION TYPE (assumed): Type V-A per 2021 IBC.

VICINITY PLAN

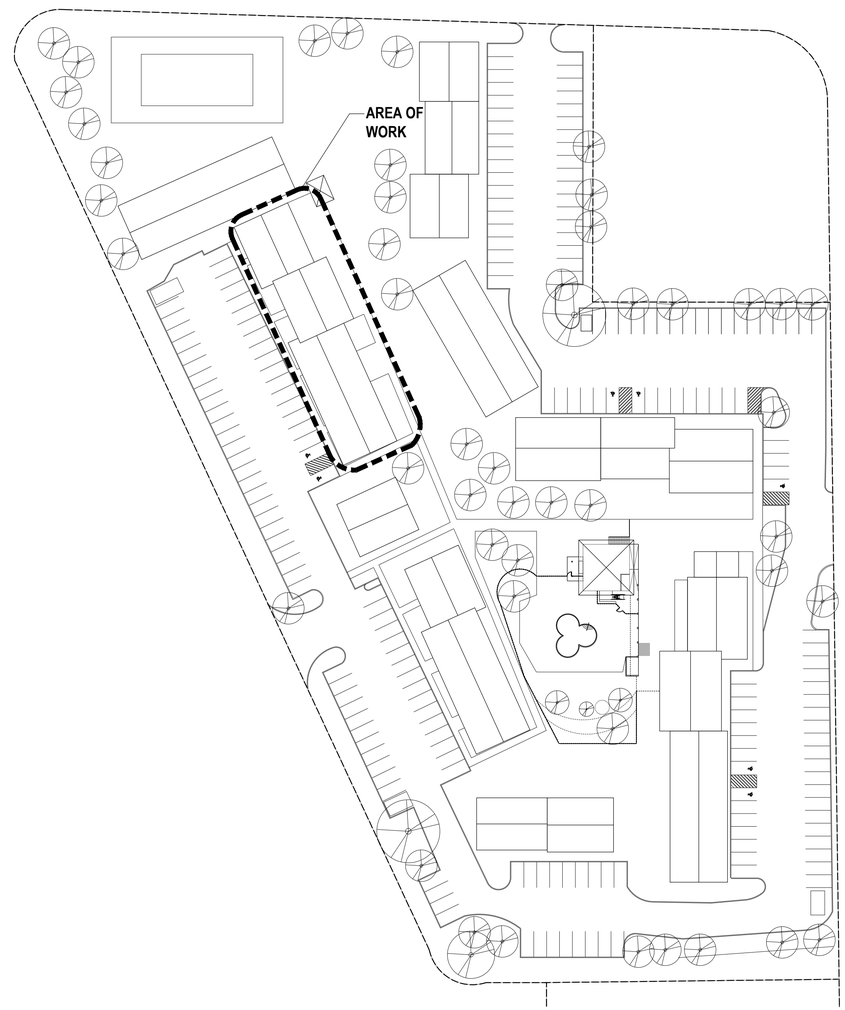

1 **SITE PLAN**
SCALE: 1" = 50' - 0"

PROJECT DATA

PROJECT DESCRIPTION: Remove (e) deck assembly and build new deck per structural for building E.

PROPERTY ADDRESS:	2501 148th Ave. S.E. Bellevue, WA 98007
PARCEL NUMBER:	102405-9002
LEGAL DESCRIPTION:	Por of NE ¼ LY ELY of ELY R/W of New Castle Rd less E 225FT of N 230FT of Less STS TGW N 12FT of E ½ of SE ¼ of NW ¼ LY ELY of SD RD Less ST
Q-S-T-R:	NE-10-24-5
LOT SIZE:	241,225 sq. ft. (5.54 Acres)
YEAR BUILT:	1969
BUILDINGS:	12
DWELLING UNITS:	108 (no change)
STORIES:	2 (no change)
ZONING:	R-20 (no change)
USE:	Multiple Residence (Low Rise) (352) (no change)
JURISDICTION:	Bellevue
CLASS:	V - Wood Frame (no change)

SHEET INDEX

A-0.1	Cover and Site Plan
AB-1.1	Existing Elevations
A-1.1	Proposed Elevations
A-1.2	Typical Deck Plans & Deck Elevations
S1.0	General Structural Notes
S2.0	Upper Ground Floor Plan
S3.0	Concrete Details
S4.0	Typical Wood Details
S5.0	Wood Details

PROJECT TEAM

CLIENT / OWNER
KING COUNTY HOUSING AUTHORITY
600 Andover Park West
Seattle, Wa 98188
c/o Darrel Westlake

ARCHITECT
KILBURN ARCHITECTS, LLC
135 Lake Street South, Suite 250
Kirkland, WA 98033
contact: H Todd Kilburn, AIA
todd@kilburnarchitects.com
t - 206.682.5211

PROPERTY CONTACT
THE CARRINGTON APARTMENTS
2501 148th Ave. SE
Bellevue, WA 98007
Community Manager
(Leasing Office)

CONTRACTOR
TBD

PROPERTY MANAGER
ALLIED RESIDENTIAL
1601 East Valley Road, Suite 180
Renton, WA 98057
Williams Portfolio 15
c/o Michael Durnian

BUILDING ENCLOSURE DOCS. STATEMENT

The undersigned has provided building enclosure documents that in my professional judgment are appropriate to satisfy the requirements of RCW 64.55.005 through 64.55.090.

7302 REGISTERED ARCHITECT
H. TODD KILBURN
STATE OF WASHINGTON

BUILDING ENCLOSURE INSPECTOR

Kilburn Architects, LLC will fulfill the role of the qualified building enclosure inspector required per RCW 64.55.03 statement below:

"All multiunit residential buildings shall have the building enclosure inspected by a qualified inspector during the course of initial construction and during rehabilitative construction."

1

KILBURN
ARCHITECTS LLC

135 Lake Street South
Suite 250
Kirkland, WA 98033

Tel: 206.682.5211
Fax: 206.682.1403

www.kilburnarchitects.com

7302 REGISTERED ARCHITECT
H. TODD KILBURN
STATE OF WASHINGTON

The Carrington Apartments

Building E Decks

2501 148th Ave SE
Bellevue, WA 98007

Permit Set

Release	Date
Permit	8.29.2024
REV. 1	5.9.2025

Cover and Site Plan

A-0.1

© 2024 KILBURN ARCHITECTS, LLC

NOTES:

1. Verify all conditions in the field.

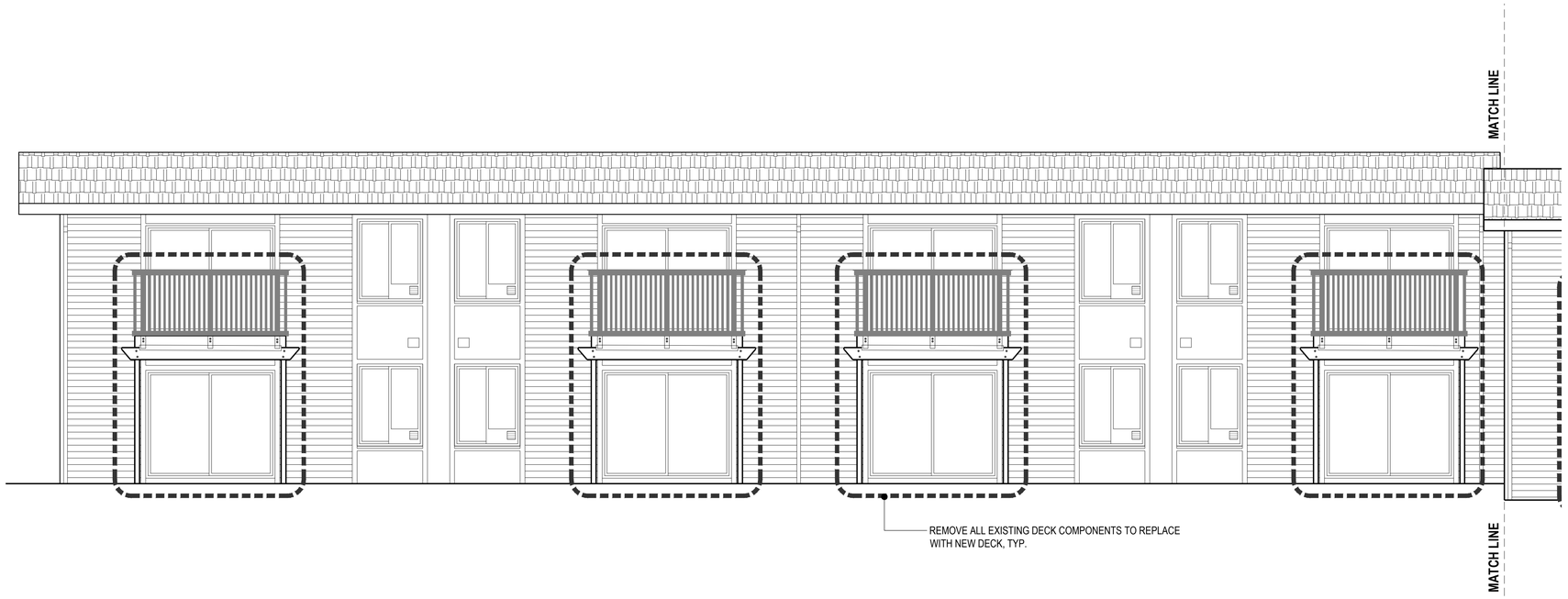

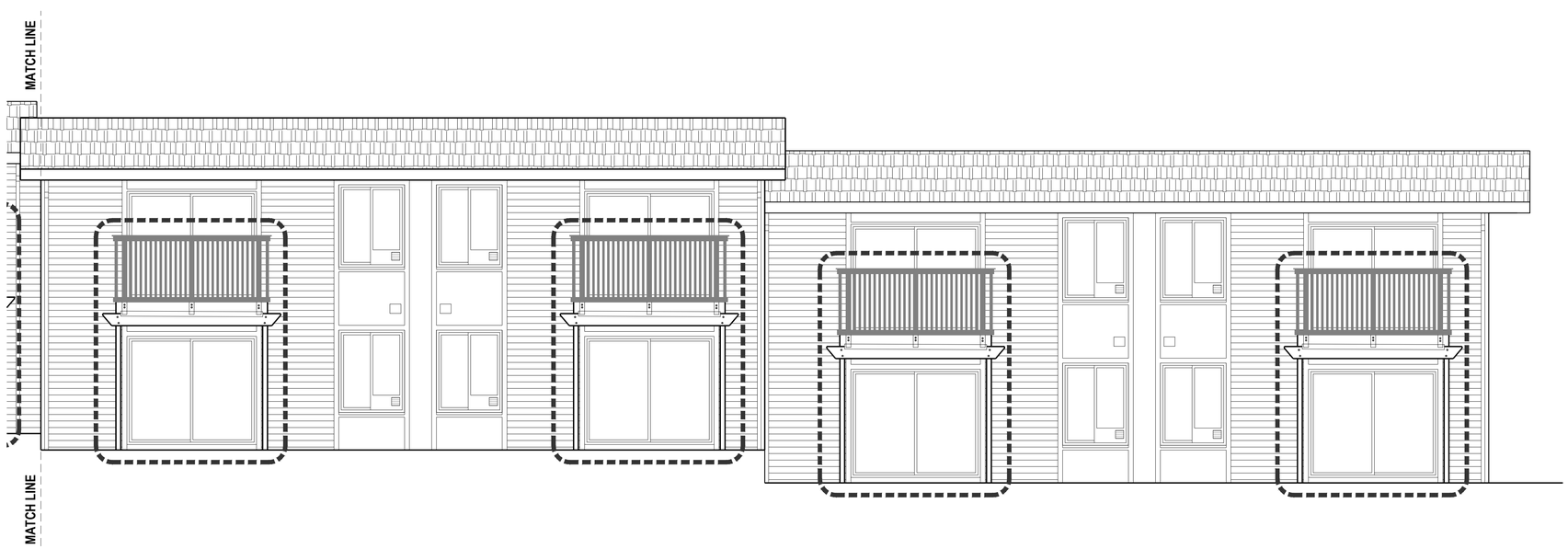

1 **East Elevation**
SCALE: 1/4" = 1' - 0"

KILBURN
ARCHITECTS LLC

135 Lake Street South
Suite 250
Kirkland, WA 98033

Tel: 206.682.5211
Fax: 206.682.1403

www.kilburnarchitects.com

The Carrington Apartments

Building E Decks

2501 148th Ave SE
Bellevue, WA 98007

Permit Set

Release	Date
Permit	8.29.2024

Existing Elevation

AB-1.1

© 2024 KILBURN ARCHITECTS, LLC

NOTES:

1. Verify all conditions in the field.

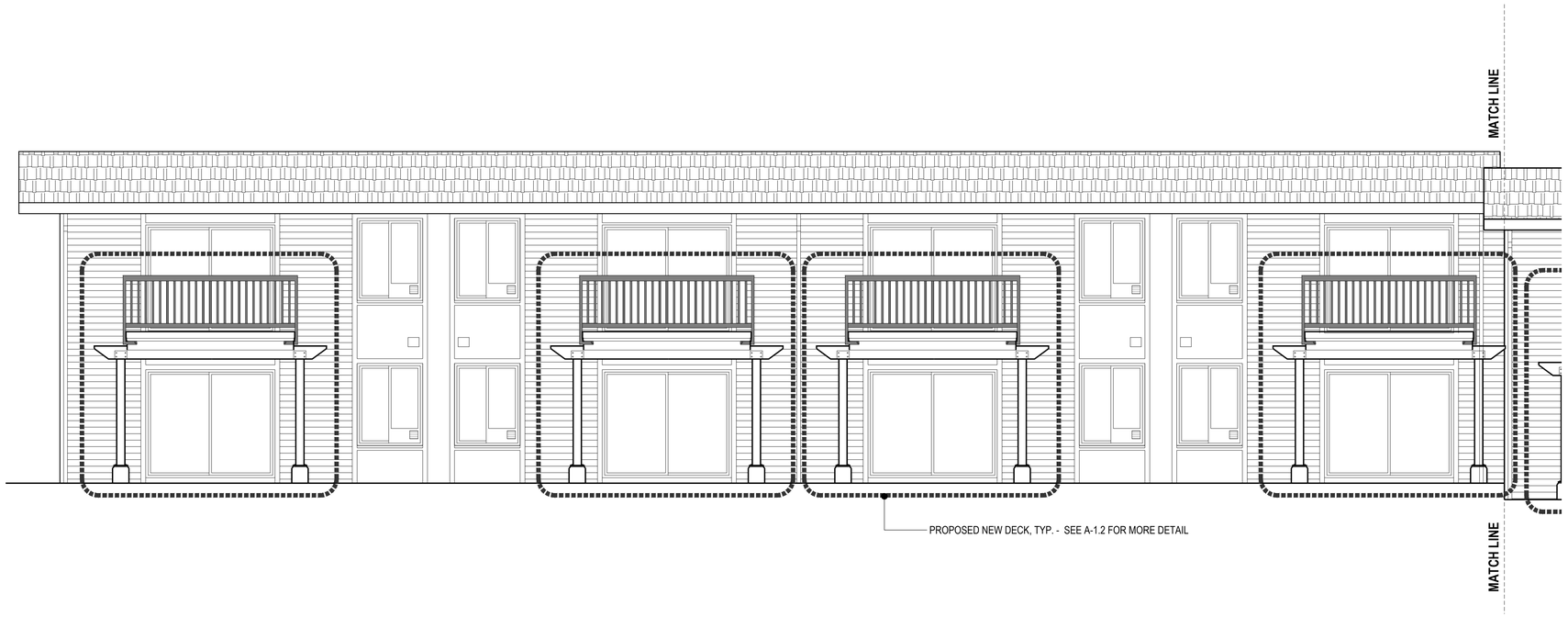

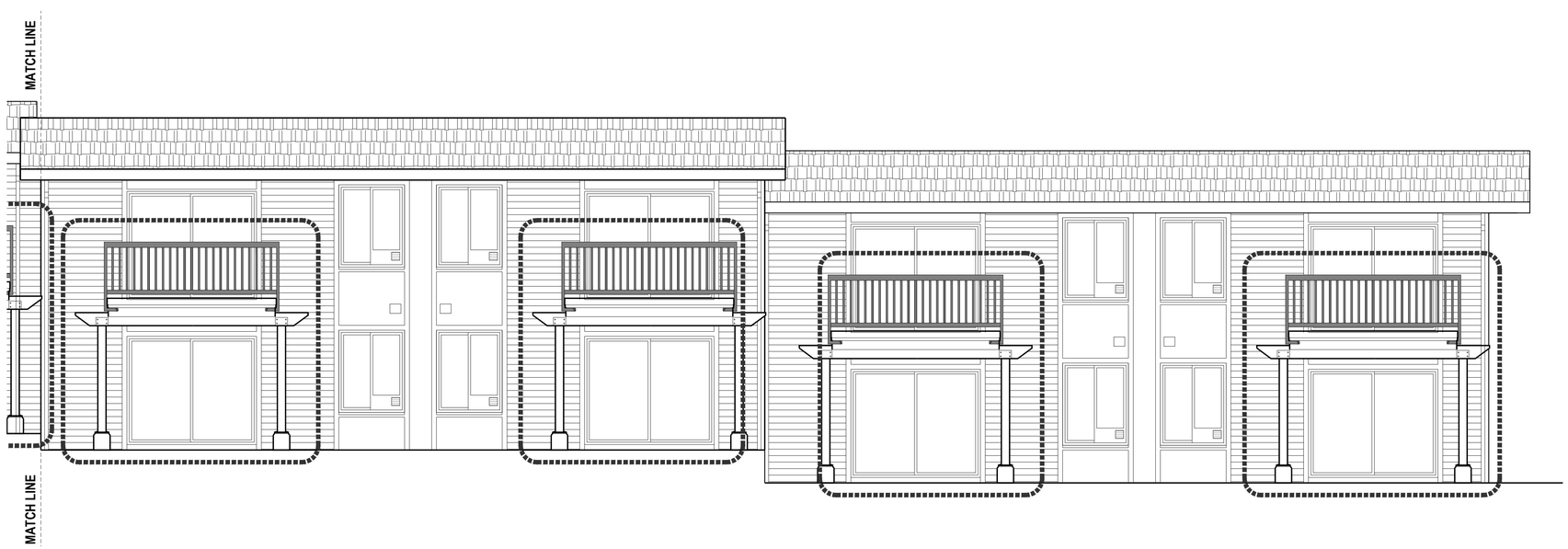

1 **East Elevation**
SCALE: 1/4" = 1' - 0"

KILBURN
ARCHITECTS LLC

135 Lake Street South
Suite 250
Kirkland, WA 98033

Tel: 206.682.5211
Fax: 206.682.1403

www.kilburnarchitects.com

The Carrington Apartments

Building E Decks

2501 148th Ave SE
Bellevue, WA 98007

Permit Set

Release	Date
Permit	8.29.2024

Proposed Elevation

A-1.1

© 2024 KILBURN ARCHITECTS, LLC

NOTES:

1. Verify all conditions in the field.

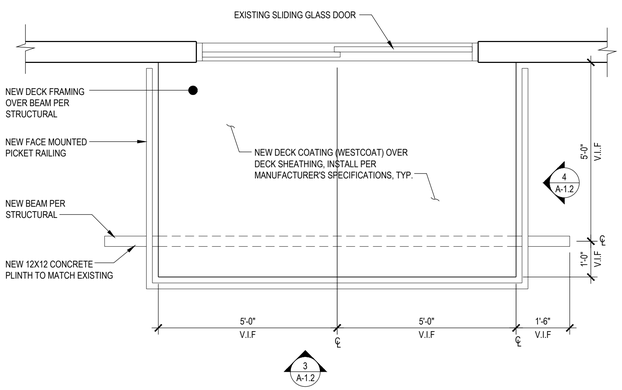

1 Typical Upper Unit Deck Plan
SCALE: 1/2" = 1' - 0"

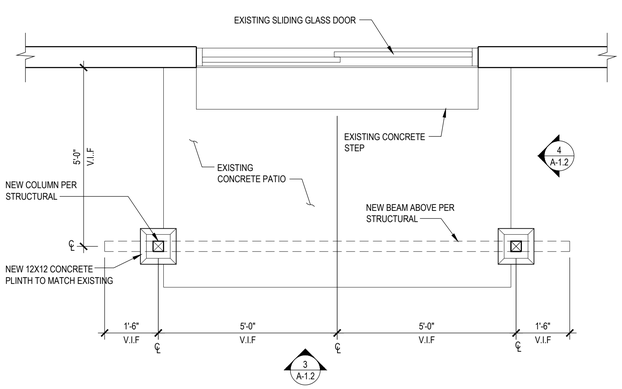

2 Typical Lower Unit Deck Plan
SCALE: 1/2" = 1' - 0"

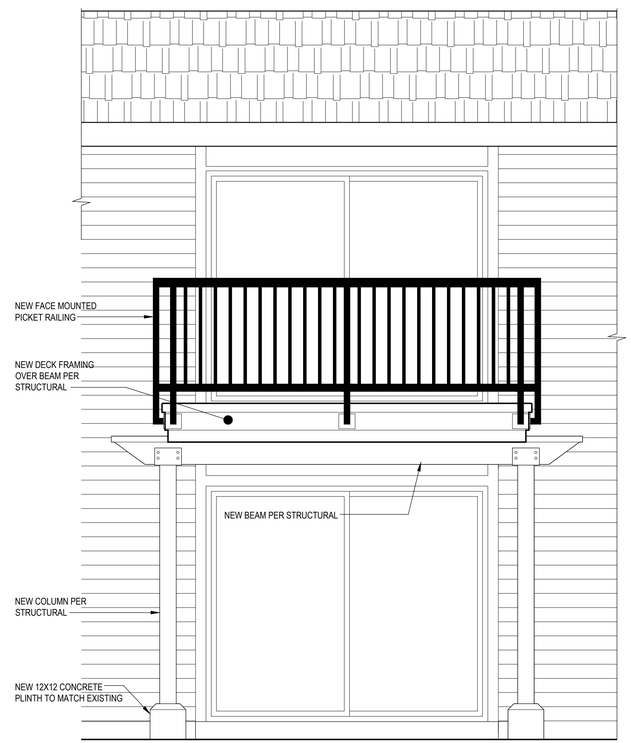

3 Proposed Typical Deck Elevation - Front
SCALE: 1/2" = 1' - 0"

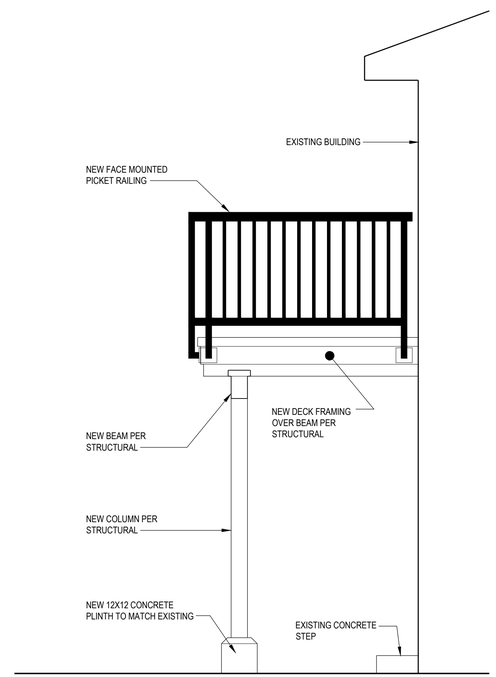

4 Proposed Typical Deck Elevation - Side
SCALE: 1/2" = 1' - 0"

KILBURN
ARCHITECTS LLC

135 Lake Street South
Suite 250
Kirkland, WA 98033

Tel: 206.682.5211
Fax: 206.682.1403

www.kilburnarchitects.com

The Carrington Apartments

Building E Decks

2501 148th Ave SE
Bellevue, WA 98007

Permit Set

Release	Date
Permit	8.29.2024

Typical Deck Plans & Deck Elevations

A-1.2

© 2024 KILBURN ARCHITECTS, LLC

GENERAL STRUCTURAL NOTES

(The following apply unless shown otherwise on the plans)

CRITERIA

1. ALL MATERIALS, WORKMANSHIP, DESIGN, AND CONSTRUCTION SHALL CONFORM TO THE DRAWINGS, SPECIFICATIONS, AND THE INTERNATIONAL BUILDING CODE (2021 EDITION). ALL AREAS NOTED RELATED TO THE SPECIFIC SCOPE OF WORK SHOWN WERE NOT ANALYZED FOR CURRENT CODE COMPLIANCE.

2. DESIGN LOADING CRITERIA

FLOOR LIVE LOAD (RESIDENTIAL EGRESS) 60 PSF

DESIGN LOADING CRITERIA - LATERAL LOADS

EARTHQUAKE
RISK CATEGORY 2, Ie =1.0
Ss =1.34 , S1 = 0.47,
SITE CLASS = D (ASSUMED),
Fa= 1.0, Fv =1.832
Sds = 1.08, Sd1 = 0.57,
SDC = D,
BSFRS = ORDINARY CANTILEVERED STEEL COLUMNS R = 1.25
Cs =0.860, RHO =1.3
DESIGN BASE SHEAR V = 1.01 KIP
EQUIVALENT LATERAL FORCE PROCEDURE

DESIGN LOADING CRITERIA - DEAD LOADS

DECK DEAD LOAD 14 PSF

(Revision 1)

3. STRUCTURAL DRAWINGS SHALL BE USED IN CONJUNCTION WITH ARCHITECTURAL AND ALL OTHER DISCIPLINES' DRAWINGS FOR BIDDING AND CONSTRUCTION. CONTRACTOR SHALL VERIFY DIMENSIONS AND CONDITIONS FOR COMPATIBILITY AND SHALL NOTIFY ARCHITECT OF ANY DISCREPANCIES PRIOR TO CONSTRUCTION.

DISCREPANCIES: THE CONTRACTOR SHALL INFORM THE ENGINEER IN WRITING, DURING THE BIDDING PERIOD, OF ANY DISCREPANCIES OR OMISSIONS NOTED ON THE DRAWINGS OR IN THE SPECIFICATIONS OR OF ANY VARIATIONS NEEDED IN ORDER TO CONFORM TO CODES, RULES AND REGULATIONS. UPON RECEIPT OF SUCH INFORMATION, THE ENGINEER WILL SEND WRITTEN INSTRUCTIONS TO ALL CONCERNED. ANY SUCH DISCREPANCY, OMISSION, OR VARIATION NOT REPORTED SHALL BE THE RESPONSIBILITY OF THE CONTRACTOR, AND WORK SHALL BE PERFORMED IN A MANNER AS DIRECTED BY THE ENGINEER.

4. CONTRACTOR SHALL VERIFY ALL EXISTING DIMENSIONS, MEMBER SIZES, AND CONDITIONS PRIOR TO COMMENCING ANY WORK. ALL DIMENSIONS OF EXISTING CONSTRUCTION SHOWN ON THE DRAWINGS ARE INTENDED AS GUIDELINES ONLY AND MUST BE FIELD VERIFIED BY THE CONTRACTOR OR THE CONTRACTOR'S SUBCONTRACTOR.

5. CONTRACTOR SHALL PROVIDE TEMPORARY BRACING FOR THE STRUCTURE AND STRUCTURAL COMPONENTS UNTIL ALL FINAL CONNECTIONS HAVE BEEN COMPLETED IN ACCORDANCE WITH THE PLANS.

ERECTION PLANS AND DETAILS OF SHORING SYSTEMS SHALL BE PROVIDED BY THE CONTRACTOR. DESIGN CALCULATIONS AND DRAWINGS ARE TO BE STAMPED BY A LICENSED STRUCTURAL ENGINEER IN THE STATE OF WASHINGTON. TWO SETS OF CALCULATIONS AND DRAWINGS ARE TO BE SUBMITTED TO THE STRUCTURAL ENGINEER FOR REVIEW. THIS CURSORY REVIEW WILL CHECK WHETHER THE CONTRACTOR'S ENGINEER HAS COMPLETED THE LOAD PATH TRANSFERRING ALL THE BUILDING'S DEAD LOADS AND CONSTRUCTION LIVE LOADS DOWN TO NATIVE SOILS. THE SHORING SHALL NOT BE SUPPORTING ON THE EXISTING STRUCTURE.

CHANGES IN FIELD CONDITIONS DURING CONSTRUCTION WILL REQUIRE RE-EVALUATION BY THE CONTRACTOR'S SHORING ENGINEER.

6. CONTRACTOR SHALL BE RESPONSIBLE FOR ALL SAFETY PRECAUTIONS AND THE METHODS, TECHNIQUES, SEQUENCES OR PROCEDURES REQUIRED TO PERFORM THE WORK.

7. CONTRACTOR-INITIATED CHANGES SHALL BE SUBMITTED IN WRITING TO THE ARCHITECT AND STRUCTURAL ENGINEER FOR APPROVAL PRIOR TO FABRICATION OR CONSTRUCTION. CHANGES SHOWN ONLY ON SHOP DRAWINGS WILL NOT SATISFY THIS REQUIREMENT.

8. DRAWINGS INDICATE GENERAL AND TYPICAL DETAILS OF CONSTRUCTION. WHERE CONDITIONS ARE NOT SPECIFICALLY INDICATED BUT ARE OF SIMILAR CHARACTER TO DETAILS SHOWN, SIMILAR DETAILS OF CONSTRUCTION SHALL BE USED, SUBJECT TO REVIEW AND APPROVAL BY THE ARCHITECT AND THE STRUCTURAL ENGINEER.

9. ALL STRUCTURAL SYSTEMS WHICH ARE TO BE COMPOSED OF FIELD ERECTED COMPONENTS SHALL BE SUPERVISED BY THE SUPPLIER DURING MANUFACTURING, DELIVERY, HANDLING, STORAGE AND ERECTION IN ACCORDANCE WITH INSTRUCTIONS PREPARED BY THE SUPPLIER.

10. SHOP DRAWINGS FOR
STRUCTURAL STEEL,

SHALL BE SUBMITTED TO THE ARCHITECT AND STRUCTURAL ENGINEER FOR REVIEW PRIOR TO THE FABRICATION OF THESE ITEMS.

CONTRACTOR SHALL SUBMIT WALL ELEVATION DRAWINGS OF AT LEAST 1/8" = 1'-0" SCALE INDICATING CONNECTION EMBEDMENTS AND WALL OPENINGS FOR REVIEW PRIOR TO CONSTRUCTION. CONTRACTOR SHALL COORDINATE WITH REINFORCEMENT SHOP DRAWINGS.

CONTRACTOR SHALL SUBMIT SHOP DRAWINGS AND DETAILS DRAWN BY THE FABRICATOR. SHOP DRAWINGS SHALL BE MINIMUM 24" x 36" SHEETS (HALF SIZE SETS ACCEPTABLE). COPIES OF THE STRUCTURAL DRAWINGS WILL NOT BE ACCEPTED.

11. SHOP DRAWING REVIEW: DIMENSIONS AND QUANTITIES ARE NOT REVIEWED BY THE ENGINEER OF RECORD, THEREFORE MUST BE VERIFIED BY THE CONTRACTOR. CONTRACTOR SHALL REVIEW AND STAMP ALL SHOP DRAWINGS PRIOR TO SUBMITTING FOR REVIEW BY ENGINEER OF RECORD. SUBMISSIONS SHALL INCLUDE A REPRODUCIBLE AND ONE COPY. REPRODUCIBLE WILL BE MARKED AND RETURNED. FOLLOWING CONTRACTOR REVIEW AND APPROVAL, SHOP DRAWINGS SHALL BE SUBMITTED TO THE ENGINEER OF RECORD ALLOWING FOR A TURN AROUND TIME OF AT LEAST 14 DAYS.

RESUBMITTALS OF PREVIOUSLY SUBMITTED SHOP DRAWINGS SHALL HAVE ALL CHANGES CLOUDED AND DATED WITH A SEQUENTIAL REVISION NUMBER. CONTRACTOR SHALL REVIEW AND STAMP ALL REVISED AND RESUBMITTED SHOP DRAWINGS PRIOR TO SUBMITTAL AND REVIEW BY THE ENGINEER OF RECORD ALLOWING FOR A TURN AROUND TIME OF AT LEAST 7 DAYS.

SHOP DRAWING SUBMITTALS PROCESSED BY THE ENGINEER OF RECORD ARE NOT CHANGE ORDERS. THE PURPOSE OF SHOP DRAWING SUBMITTALS BY THE CONTRACTOR IS TO DEMONSTRATE TO THE ENGINEER THAT THE CONTRACTOR UNDERSTANDS THE DESIGN CONCEPT. THE CONTRACTOR DEMONSTRATES THIS UNDERSTANDING BY INDICATING WHICH MATERIAL THEY INTEND TO FURNISH AND INSTALL AND BY DETAILING THE FABRICATION AND INSTALLATION METHODS THEY INTEND TO USE. IF DEVIATIONS, DISCREPANCIES, OR CONFLICTS BETWEEN SHOP DRAWING SUBMITTALS AND THE CONTRACT DOCUMENTS ARE DISCOVERED EITHER PRIOR TO OR AFTER SHOP DRAWING SUBMITTALS ARE PROCESSED BY THE ENGINEER, THE DESIGN DRAWINGS AND SPECIFICATIONS SHALL CONTROL AND SHALL BE FOLLOWED.

SHOP DRAWINGS OF ALL DESIGN BUILD COMPONENTS SUCH AS PRE-MANUFACTURED OR PRE-ENGINEERED ROOF OR FLOOR TRUSSES SHALL INCLUDE THE DESIGNING PROFESSIONAL ENGINEER'S STAMP, STATE OF WASHINGTON AND SHALL BE APPROVED BY THE COMPONENT DESIGNER PRIOR TO CURSORY REVIEW BY THE ENGINEER OF RECORD FOR LOADS IMPOSED ON THE BASIC STRUCTURE. THE COMPONENT DESIGNER IS RESPONSIBLE FOR CODE CONFORMANCE AND ALL NECESSARY CONNECTIONS NOT SPECIFICALLY CALLED OUT ON ARCHITECTURAL OR STRUCTURAL DRAWINGS. SHOP DRAWINGS SHALL INDICATE MAGNITUDE AND DIRECTION OF ALL LOADS IMPOSED ON BASIC STRUCTURE. DESIGN CALCULATIONS SHALL BE INCLUDED IN THE SHOP DRAWING SUBMITTAL.

INSPECTIONS

12.

STRUCTURAL ELEMENTS	FREQUENCY OF INSPECTON	CODE REFERENCE
CONCRETE		
CAST-IN ANCHOR BOLTS (NON-SEISMIC)	PERIODIC	IBC 1908.5,1909.1 & TABLE 1705.3
DRILLED AND EPOXIED BOLTS, RODS AND ANCHORS	PERIODIC	IBC 1909.1 & TABLE 1705.3
DRILLED AND EPOXIED REINFORCING	CONTINUOUS	IBC 1705.1.1
EXPANSION BOLTS AND THREADED EXPANSION INSERTS	PERIODIC	IBC TABLE 1705.3
PLACEMENT OF EMBEDS IN POST-TENSIONED SLABS	CONTINUOUS	IBC 1705.1.1
STRUCTURAL STEEL FABRICATION AND ERECTION	PERIODIC	IBC 1705.2.1, AISC 360

SHALL BE SUPERVISED IN ACCORDANCE WITH SECTION 109, SECTION 1704, AND SECTION 1708 OF THE INTERNATIONAL BUILDING CODE AND THE PROJECT SPECIFICATIONS BY A QUALIFIED TESTING AGENCY DESIGNATED BY THE ARCHITECT. THE ARCHITECT, STRUCTURAL ENGINEER, AND SEATTLE DEPARTMENT OF PLANNING AND DEVELOPMENT SHALL BE FURNISHED WITH COPIES OF ALL INSPECTION REPORTS AND TEST RESULTS.

13. STATEMENT OF SPECIAL INSPECTIONS SHALL CONFORM TO THE REQUIREMENTS OF SECTION 1705 OF THE 2021 IBC AS FOLLOWS:

A. THE FOLLOWING SYSTEMS WILL BE SUBJECT TO THE SEISMIC QUALITY ASSURANCE:
ORDINARY STEEL MOMENT FRAMES
CONCRETE FOUNDATIONS

B. SPECIAL INSPECTION AND TESTING OF ORDINARY STEEL MOMENT FRAMES AND CONCRETE FOUNDATIONS SHALL COMFORM TO IBC SECTION 1708.

C. THE TYPE AND FREQUENCY OF TESTING REQUIRED SHALL BE PER IBC SECTION 1708 AND 1704.

D. THE TYPE AND FREQUENCY OF SPECIAL INSPECTIONS REQUIRED SHALL BE PER IBC SECTION 1706 AND 1704.

E. THE REQUIRED FREQUENCY AND DISTRIBUTION OF TESTING AND SPECIAL INSPECTION REPORTS SHALL BE THE RESPONSIBILITY OF THE INSPECTION/TESTING AGENCY. REPORTS SHALL BE SUBMITTED TO THE ARCHITECT AND ENGINEER OF RECORD WITHIN 14 DAYS OF INSPECTION.

F. STRUCTURAL OBSERVATION OF THE LATERAL AND GRAVITY STRUCTURAL SYSTEMS SHALL OCCUR AT APPROPRIATE INTERVALS DURING CONSTRUCTION. THE STRUCTURAL ENGINEER SHALL OBSERVE THAT THE WORK IS PROGRESSING IN GENERAL CONFORMANCE WITH THE CONTRACT DOCUMENTS AND ACCORDING TO THE DESIGN INTENT.

H. A STRUCTURAL OBSERVATION REPORT SHALL BE SUBMITTED TO THE ARCHITECT OF RECORD AFTER EACH OBSERVATION.

GEOTECHNICAL

14. FOUNDATION AND SLAB NOTES: SUB-GRADE PREPARATION INCLUDING DRAINAGE, EXCAVATION, COMPACTION, AND FILLING REQUIREMENTS, SHALL CONFORM STRICTLY WITH RECOMMENDATIONS GIVEN BY THE INDIVIDUAL TESTING AGENCY OR LOCAL BUILDING OFFICIAL AT THE TIME OF EXCAVATION.

FOOTINGS SHALL BEAR ON SOLID UNDISTURBED EARTH (CONTROLLED, COMPACTED STRUCTURAL FILL OR BOTH) AT LEAST 18" BELOW LOWEST ADJACENT FINISHED GRADE. FOOTING DEPTHS/ELEVATIONS SHOWN ON PLANS (OR IN DETAILS) ARE MINIMUM AND FOR GUIDANCE ONLY. THE ACTUAL ELEVATIONS OF FOOTINGS MUST BE ESTABLISHED BY THE CONTRACTOR IN THE FIELD WORKING WITH THE TESTING LAB OR BUILDING INSPECTOR. BACKFILL BEHIND ALL RETAINING WALLS WITH FREE DRAINING GRANULAR FILL AND PROVIDE FOR SUBSURFACE DRAINAGE.

ALLOWABLE SOIL PRESSURE 1500 PSF (ASSUMED)

CONCRETE

15. CONCRETE SHALL BE MIXED, PROPORTIONED, CONVEYED AND PLACED IN ACCORDANCE WITH IBC SECTION 1905 AND ACI 301. CONCRETE SHALL ATTAIN A 28-DAY STRENGTH OF f'_c = 2,500 PSI AND MIX SHALL CONTAIN NOT LESS THAN 5-1/2 SACKS OF CEMENT PER CUBIC YARD AND SHALL BE PROPORTIONED TO PRODUCE A SLUMP OF 5" OR LESS.

THE MINIMUM AMOUNTS OF CEMENT AND MAXIMUM AMOUNTS OF WATER MAY BE CHANGED IF A CONCRETE PERFORMANCE MIX IS SUBMITTED TO THE STRUCTURAL ENGINEER AND THE BUILDING DEPARTMENT FOR APPROVAL TWO WEEKS PRIOR TO PLACING ANY CONCRETE. THE CONCRETE PERFORMANCE MIX SHALL INCLUDE THE AMOUNTS OF CEMENT, FINE AND COARSE AGGREGATE, WATER AND ADMIXTURES AS WELL AS THE WATER CEMENT RATIO, SLUMP, CONCRETE YIELD AND SUBSTANTIATING STRENGTH DATA IN ACCORDANCE WITH ACI 318 SECTION 5.3. REVIEW OF MIX SUBMITTALS BY THE ENGINEER OF RECORD INDICATES ONLY THAT INFORMATION PRESENTED CONFORMS GENERALLY WITH CONTRACT DOCUMENTS. CONTRACTOR OR SUPPLIER MAINTAINS FULL RESPONSIBILITY FOR SPECIFIED PERFORMANCE.

ALL CONCRETE WITH SURFACES EXPOSED TO STANDING WATER SHALL BE AIR-ENTRAINED WITH AN AIR-ENTRAINING AGENT CONFORMING TO ASTM C260-06, C494M-05a, C618-05, C989-06, AND C1017M-07. TOTAL AIR CONTENT SHALL BE IN ACCORDANCE WITH ACI 318 TABLE 4.4.1.

16. REINFORCING STEEL SHALL CONFORM TO ASTM A615 (INCLUDING SUPPLEMENT S1), GRADE 60, f_y = 60,000 PSI. EXCEPTION: ANY BARS SPECIFICALLY NOTED ON THE DRAWINGS AS "GRADE 40", fy = 40,000 PSI. GRADE 60 REINFORCING BARS INDICATED ON DRAWINGS TO BE WELDED SHALL CONFORM TO ASTM A706. REINFORCING COMPLYING WITH ASTM A615(S1) MAY BE WELDED ONLY IF MATERIAL PROPERTY REPORTS INDICATING CONFORMANCE WITH WELDING PROCEDURES SPECIFIED IN A.W.S. D1.4 ARE SUBMITTED.

WELDED WIRE FABRIC SHALL CONFORM TO ASTM A-185.

SPIRAL REINFORCEMENT SHALL BE PLAIN WIRE CONFORMING TO ASTM A615, GRADE 60, fy = 60,000 PSI.

17. REINFORCING STEEL SHALL BE DETAILED (INCLUDING HOOKS AND BENDS) IN ACCORDANCE WITH ACI SP-66 (04) DETAILING MANUAL AND THE LATEST EDITION OF ACI 318. LAP ALL CONTINUOUS REINFORCEMENT 30 BAR DIAMETERS OR 2'-0" MINIMUM. PROVIDE CORNER BARS AT ALL WALL AND FOOTING INTERSECTIONS. LAP CORNER BARS 30 BAR DIAMETERS OR 2'-0" MINIMUM. LAP ADJACENT MATS OF WELDED WIRE FABRIC A MINIMUM OF 8" AT SIDES AND ENDS.

NO BARS PARTIALLY EMBEDDED IN HARDENED CONCRETE SHALL BE FIELD BENT UNLESS SPECIFICALLY SO DETAILED OR APPROVED BY THE STRUCTURAL ENGINEER.

18. CONCRETE PROTECTION (COVER) FOR REINFORCING STEEL SHALL BE AS FOLLOWS:

FOOTINGS AND OTHER UNFORMED SURFACES, EARTH FACE		3"
FORMED SURFACES EXPOSED TO EARTH (i.e. WALLS BELOW GROUND) OR WEATHER	(#6 BARS OR LARGER)	2"
	(#5 BARS OR SMALLER)	1 1/2"

19. CAST-IN-PLACE CONCRETE: SEE ARCHITECTURAL DRAWINGS FOR EXACT LOCATIONS AND DIMENSIONS OF DOOR AND WINDOW OPENINGS IN ALL CONCRETE WALLS. SEE MECHANICAL DRAWINGS FOR SIZE AND LOCATION OF MISCELLANEOUS MECHANICAL OPENINGS THROUGH CONCRETE WALLS. SEE ARCHITECTURAL DRAWINGS FOR ALL GROOVES, NOTCHES, CHAMFERS, FEATURE STRIPS, COLOR, TEXTURE, AND OTHER FINISH DETAILS AT ALL EXPOSED CONCRETE SURFACES, BOTH CAST-IN-PLACE AND PRECAST.

20. EMBEDDED ITEMS IN CAST-IN-PLACE CONCRETE: EMBEDDED ITEMS IN CAST-IN-PLACE CONCRETE SHALL NOT BE "WET-SET" UNLESS SPECIFICALLY APPROVED BY ENGINEER OF RECORD. THESE ITEMS INCLUDE, BUT ARE NOT LIMITED TO, REINFORCING STEEL, ANCHOR BOLTS, DEFORMED BAR ANCHORS, EMBED PLATES, OR OTHER MISC. STEEL SHAPES TO BE CAST INTO CONCRETE.

21. NON-SHRINK GROUT SHALL BE FURNISHED BY AN APPROVED MANUFACTURER AND SHALL BE MIXED AND PLACED IN STRICT ACCORDANCE WITH THE MANUFACTURER'S PUBLISHED RECOMMENDATIONS. GROUT STRENGTH SHALL BE AT LEAST EQUAL TO THE MATERIAL ON WHICH IT IS PLACED (3000 PSI MINIMUM).

22. EPOXY-GROUTED ITEMS SPECIFIED ON THE DRAWINGS SHALL BE GROUTED WITH HIT HY-200 ADHESIVE ANCHOR SYSTEMS AS MANUFACTURED BY HILTI, INC. OR SET-3G HIGH STRENGTH ADHESIVE ANCHOR SYSTEM AS MANUFACTURED BY SIMPSON STRONG-TIE OR AN ENGINEER APPROVED ALTERNATE THAT HAS I.C.C TEST DATA FOR THEIR SPECIFIC PRODUCT AND APPLICATION. INSTALL IN STRICT ACCORDANCE WITH I.C.C REPORTS FOR SPECIFIC EPOXY UNLESS NOTED OTHERWISE ON THE STRUCTURAL DRAWINGS. HOLE SIZE SHALL BE 1/8" LARGER THAN BAR, ROD OR BOLT SIZE. NOTE: NO WELDING IS TO TAKE PLACE WITHIN 24" OF HARDENED EPOXY.

STEEL

23. STRUCTURAL STEEL DESIGN, FABRICATION, AND ERECTION SHALL BE BASED ON THE A.I.S.C. "SPECIFICATION FOR THE DESIGN, FABRICATION AND ERECTION OF STRUCTURAL STEEL FOR BUILDINGS," LATEST EDITION, PLUS ALL REFERENCED CODES.

24. STRUCTURAL STEEL SHALL CONFORM TO ASTM A992, Fy = 50 KSI, FOR WIDE FLANGE SHAPES AND TO ASTM A36 Fy = 36 KSI, FOR PLATES, MISCELLANEOUS ROLLED SHAPES AND ALL-THREAD RODS. STEEL PIPE SHALL CONFORM TO ASTM A-53, TYPE E OR S, GRADE B, Fy = 35 KSI. STRUCTURAL TUBING (HSS ROUND, SQUARE OR RECTANGULAR TUBES) SHALL CONFORM TO ASTM A500, GRADE B, WITH Fy = 46 KSI FOR RECTANGULAR/SQUARE SECTIONS AND Fy = 42 KSI FOR ROUND SECTIONS. ANCHOR BOLTS SHALL CONFORM TO ASTM F1554, GRADE 36 TYPICAL AND GRADE 105 FOR HIGH-STRENGTH ANCHOR BOLTS (WITH 3x3x3/8 PLATE WASHER AND DOUBLE NUT). HIGH-STRENGTH CONNECTION BOLTS SHALL CONFORM TO ASTM A325-X. COMMON BOLTS SHALL CONFORM TO ASTM A307, GRADE A. HIGH STRENGTH ALL-THREAD ROD SHALL CONFORM TO ASTM A193 GRADE B7.

25. ARCHITECTURALLY EXPOSED STRUCTURAL STEEL SHALL CONFORM TO SECTION 10 OF THE AISC CODE OF STANDARD PRACTICE FOR STEEL BUILDINGS AND BRIDGES.

26. ALL WELDING SHALL BE IN CONFORMANCE WITH A.I.S.C. AND A.W.S. STANDARDS AND SHALL BE PERFORMED BY W.A.B.O. CERTIFIED WELDERS USING E70XX ELECTRODES. ONLY PRE-QUALIFIED WELDS (AS DEFINED BY A.W.S.) SHALL BE USED. WELDING OF GRADE 60 REINFORCING BARS (IF REQUIRED) SHALL BE PERFORMED USING LOW HYDROGEN ELECTRODES. WELDING OF GRADE 40 REINFORCING BARS (IF REQUIRED) SHALL BE PERFORMED USING E70XX ELECTRODES. SEE REINFORCING NOTE FOR MATERIAL REQUIREMENTS OF WELDED BARS. NOTE: NO WELDING IS TO TAKE PLACE WITHIN 24" OF HARDENED EPOXY NOR WITHIN 4" OF COLD BENDS IN REINFORCING STEEL. FABRICATION AND WELDING OF STRUCTURAL STEEL TAKING PLACE IN THE FABRICATORS SHOP SHALL BE SPECIAL INSPECTED PER GENERAL NOTE # 13. CONTRACTOR SHALL SUBMIT INSPECTION REPORTS AND CERTIFICATE OF COMPLIANCE TO THE CITY FOR REVIEW.

ALL WELDS SHALL BE VISUALLY TESTED BY A QUALIFIED INSPECTOR. IN ADDITION ALL COMPLETE PENETRATION WELDS SHALL BE TESTED USING THE ULTRASONIC METHOD AT THE PLANT OR SITE BY A QUALIFIED INSPECTOR. VERIFY LOCATIONS WITH THE STRUCTURAL ENGINEER WHERE ULTRASONIC TESTING IS REQUIRED FOR PARTIAL PENETRATION WELDS.

WOOD

27. FRAMING LUMBER SHALL BE KILN DRIED, AND GRADED AND MARKED IN CONFORMANCE WITH W.C.L.B. STANDARD GRADING RULES FOR WEST COAST LUMBER NO. 16, LATEST EDITION. FURNISH TO THE FOLLOWING MINIMUM STANDARDS, UNLESS OTHERWISE NOTED ON THE PLANS:

JOISTS: (2 X MEMBERS)	DOUG FIR #2 MINIMUM BASIC DESIGN STRESS, Fb = 900 PSI
(3 X AND 4 X MEMBERS)	DOUG FIR #1 MINIMUM BASIC DESIGN STRESS, Fb = 1000 PSI
BEAMS AND STRINGERS: (INCLUDING 6 X 10 AND LARGER MEMBERS)	DOUG FIR #1 MINIMUM BASIC DESIGN STRESS, Fb = 1200 PSI
POSTS AND TIMBERS: (6 X 6 AND LARGER)	DOUG FIR #2 MINIMUM BASIC DESIGN STRESS, Fb = 900 PSI
STUDS, PLATES & MISCELLANEOUS LIGHT FRAMING:	DOUG FIR STANDARD GRADE MINIMUM BASIC DESIGN STRESS, Fb = 575 PSI
BOLTED FRAMING: STUDS, LEDGERS, AND PLATES	DOUG FIR #2 MINIMUM BASIC DESIGN STRESS, Fb = 900 PSI
PRESSURE TREATED FRAMING: LEDGERS, AND PLATES	HEM FIR #2 MINIMUM BASIC DESIGN STRESS, Fb = 800 PSI

28. PLYWOOD SHEATHING SHALL BE GRADE C-D, EXTERIOR GLUE OR STRUCTURAL II, EXTERIOR GLUE IN CONFORMANCE WITH DOC PS1. SEE PLANS FOR THICKNESS, PANEL IDENTIFICATION INDEX AND NAILING REQUIREMENTS.

29. ALL WOOD MEMBERS EXPOSED TO WEATHER OR IN DIRECT CONTACT WITH SOIL SHALL BE PRESSURE-TREATED WITH ALKALINE COPPER QUATERNARY (ACQ). ALL WOOD MEMBERS (INCLUDING PLATES) IN DIRECT CONTACT WITH CONCRETE OR MASONRY SHALL BE PRESSURE-TREATED WITH SODIUM BORATE (SBX).

ALL METAL CONNECTORS IN CONTACT WITH "ACQ" PRESSURE-TREATED LUMBER SHALL BE TYPE 304 OR 316 STAINLESS STEEL. THIS INCLUDES WASHERS, SCREWS, NAILS, HANGERS, AND ANY OTHER MISCELLANEOUS LT. GAGE METAL CONNECTORS. WHERE ACQ LUMBER IS USED IN INTERIOR CONDITIONS, G185 ("HOT-DIP" GALVANIZED TO 1.85 OUNCES PER SQUARE FOOT) METAL CONNECTORS MAY BE USED IN LIEU OF STAINLESS STEEL. METAL CONNECTORS 1/2" THICK OR GREATER NEED NOT BE GALVANIZED FOR INTERIOR USE. METAL CONNECTORS 1/2" THICK PLUS ARE TO BE GALVANIZED FOR EXTERIOR USE, UNLESS SPECIFIED OTHERWISE BY THE ARCHITECT.

30. TIMBER CONNECTORS CALLED OUT BY LETTERS AND NUMBERS SHALL BE "STRONG-TIE" BY SIMPSON COMPANY, AS SPECIFIED IN THEIR CATALOG NO.C-2021. EQUIVALENT DEVICES BY OTHER MANUFACTURERS MAY BE SUBSTITUTED, PROVIDED THEY HAVE ICBO APPROVAL FOR EQUAL OR GREATER LOAD CAPACITIES. PROVIDE NUMBER AND SIZE OF FASTENERS AS SPECIFIED BY MANUFACTURER. CONNECTORS SHALL BE INSTALLED IN ACCORDANCE WITH THE MANUFACTURER'S RECOMMENDATIONS. WHERE CONNECTOR STRAPS CONNECT TWO MEMBERS, PLACE ONE-HALF OF THE NAILS OR BOLTS IN EACH MEMBER. ALL BOLTS IN WOOD MEMBERS SHALL CONFORM TO ASTM A307. PROVIDE WASHERS UNDER THE HEADS AND NUTS OF ALL BOLTS AND LAG SCREWS BEARING ON WOOD. UNLESS NOTED OTHERWISE, ALL NAILS SHALL BE COMMON. ALL SHIMS SHALL BE SEASONED AND DRIED AND THE SAME GRADE (MINIMUM) AS MEMBERS CONNECTED.

ALL JOISTS SHALL BE CONNECTED TO FLUSH BEAMS WITH "U" SERIES JOIST HANGERS. ALL DOUBLE OR TRIPPLE JOIST BEAMS SHALL BE CONNECTED TO FLUSH BEAMS WITH "HU" SERIES JOIST HANGERS.

31. HOLDOWNS CALLED OUT BY LETTERS "HDU", ARE MANUFACTURED BY THE SIMPSON COMPANY, AS SPECIFIED IN THEIR CATALOG NO.C-2021. EQUIVALENT DEVICES BY OTHER MANUFACTURERS MAY BE SUBSTITUTED, PROVIDED THEY HAVE ICC APPROVAL FOR EQUAL OR GREATER LOAD CAPACITIES. EACH SIMPSON HOLD-DOWN SHALL BE BOLTED TO A MINIMUM OF (2) FULL HEIGHT STUDS. SEE SCHEDULE ON PLANS FOR FURTHER STUD REQUIREMENTS. PROVIDE NUMBER AND SIZE OF FASTENERS AS SPECIFIED BY MANUFACTURER. ALL HOLDOWNS SHALL BE INSTALLED IN ACCORDANCE WITH THE MANUFACTURER'S RECOMMENDATIONS. PROVIDE WASHERS UNDER THE HEADS AND NUTS OF ALL BOLTS AND LAG SCREWS BEARING ON WOOD.

32. WOOD FRAMING NOTES-- THE FOLLOWING APPLY UNLESS OTHERWISE SHOWN ON THE PLANS:

A. ALL WOOD FRAMING DETAILS NOT SHOWN OTHERWISE SHALL BE CONSTRUCTED TO THE MINIMUM STANDARDS OF THE INTERNATIONAL BUILDING CODE. MINIMUM NAILING, UNLESS OTHERWISE NOTED, SHALL CONFORM TO TABLE 2304.10.1 OF THE INTERNATIONAL BUILDING CODE. UNLESS NOTED OTHERWISE, ALL NAILS SHALL BE COMMON. COORDINATE THE SIZE AND LOCATION OF ALL OPENINGS WITH MECHANICAL AND ARCHITECTURAL DRAWINGS. PROVIDE WASHERS UNDER THE HEADS AND NUTS OF ALL BOLTS AND LAG SCREWS BEARING ON WOOD.

B. WALL FRAMING: ALL STUD WALLS SHOWN AND NOT OTHERWISE NOTED SHALL BE 2 x 4 STUDS @ 16" O.C. AT INTERIOR WALLS AND 2 x 6 @ 16" O.C. AT EXTERIOR WALLS. TWO STUDS MINIMUM SHALL BE PROVIDED AT THE END OF ALL WALLS AND AT EACH SIDE OF ALL OPENINGS. TWO 2 x 8 HEADERS SHALL BE PROVIDED OVER ALL OPENINGS NOT OTHERWISE NOTED. SOLID BLOCKING FOR WOOD COLUMNS SHALL BE PROVIDED THROUGH FLOORS TO SUPPORTS BELOW. PROVIDE CONTINUOUS SOLID BLOCKING AT MID-HEIGHT OF ALL STUD WALLS OVER 8' IN HEIGHT.

ALL STUD WALLS ATTACHED TO CONCRETE FOUNDATION WALLS SHALL HAVE THEIR LOWER WOOD PLATES BOLTED WITH 5/8" DIAMETER ANCHOR BOLTS @ 6'-0" O.C. WITH 3" x 3" x 1/4" SQUARE WASHERS OR 3" DIAMETER ROUND WASHERS UNLESS OTHERWISE NOTED. LAYOUT OF WALL PLATES, STUDS, AND ANCHORS SHALL CONFORM TO THE REQUIREMENTS OF SECTION 2308.6 OF THE 2018 IBC. ALL SILL PLATE PIECES SHALL HAVE A MINIMUM OF TWO ANCHOR BOLTS EMBEDED INTO CONCRETE, WITH THE FIRST ANCHOR BOLT LOCATED NOT MORE THAN 12" FROM THE END OF THE PLATE, AND NO CLOSER THAN 4" TO THE END.ALL STUD WALLS SHALL HAVE THEIR LOWER WOOD PLATES ATTACHED TO WOOD FRAMING BELOW WITH 16d NAILS AT 12" O.C. STAGGERED. UNLESS INDICATED OTHERWISE. INDIVIDUAL MEMBERS OF BUILT-UP POSTS SHALL BE NAILED TO EACH OTHER WITH 16d @ 12" O.C. STAGGERED. REFER TO THE PLANS AND SHEAR WALL SCHEDULE FOR REQUIRED SHEATHING AND NAILING. WHEN NOT OTHERWISE NOTED, PROVIDE GYPSUM WALLBOARD ON INTERIOR SURFACES AND APA RATED WOOD SHEATHING ON EXTERIOR SURFACES NAILED TO ALL STUDS, TOP AND BOTTOM PLATES AND BLOCKING WITH NAILS AT 7" O.C. USE 5d COOLER NAILS FOR 1/2" GWB AND 6d COOLER NAILS FOR 5/8" GWB. USE 8d COMMON, GALVANIZED NAILS FOR EXTERIOR SHEATHING.

C. FLOOR AND ROOF FRAMING: PROVIDE DOUBLE JOISTS UNDER ALL PARALLEL PARTITIONS THAT EXTEND MORE THAN ONE-HALF OF THE JOIST LENGTH AND AROUND ALL OPENINGS IN FLOORS OR ROOFS UNLESS OTHERWISE NOTED. PROVIDE BRIDGING @ 8' O.C. AND SOLID BLOCKING AT ALL BEARING POINTS. COORDINATE THE SIZE AND LOCATION OF ALL OPENINGS WITH ARCHITECTURAL AND MECHANICAL DRAWINGS.

TOENAIL JOISTS TO SUPPORTS WITH TWO 16d NAILS. ATTACH TIMBER JOISTS TO FLUSH HEADERS OR BEAMS WITH SIMPSON METAL JOIST HANGERS IN ACCORDANCE WITH NOTES ABOVE. NAIL ALL MULTI-JOIST BEAMS TOGETHER WITH 16d @ 12" O.C. STAGGERED.

UNLESS OTHERWISE NOTED ON THE PLANS, PLYWOOD ROOF AND FLOOR SHEATHING SHALL BE LAID UP WITH GRAIN PERPENDICULAR TO SUPPORTS AND NAILED WITH 8d NAILS @ 6" O.C. TO FRAMED PANEL EDGES AND OVER STUD WALLS AS SHOWN ON PLANS AND @ 12" O.C. (10" O.C. AT FLOORS) TO INTERMEDIATE SUPPORTS. PROVIDE APPROVED PLYWOOD EDGE CLIPS CENTERED BETWEEN JOISTS/TRUSSES AT UNBLOCKED ROOF SHEATHING EDGES OR PROVIDE SOLID BLOCKING. ALL FLOOR SHEATHING EDGES SHALL HAVE APPROVED TONGUE-AND-GROOVE JOINTS AT UNBLOCKED EDGES OR SHALL BE SUPPORTED WITH SOLID BLOCKING. TOENAIL BLOCKING TO PLATE WITH 16d @ 12" O.C. OR (2) 16d EACH END AT SUPPORTS UNLESS OTHERWISE NOTED. AT BLOCKED FLOOR AND ROOF DIAPHRAGMS, INSTALL FLAT 2X BLOCKING AT ALL UNFRAMED PANEL EDGES AND NAIL WITH EDGE NAILING SPECIFIED.

D. NAILING: MINIMUM NAIL DIAMETER AND LENGTH SHALL BE AS FOLLOWS:

	NAIL SIZE ON DRAWINGS OR DETAILS	DIAMETER AND LENGTH
SHEATHING NAILS	8d	0.131" x 2 ¼"
	10d	0.148" x 2 ½"
FRAMING NAILS	8d	0.131" x 2 ½"
	10d	0.148" x 3"
	16d	0.161" x 3 ½"

ILG
I.L. GROSS
STRUCTURAL ENGINEERS
23914 56th Avenue W. ~ Suite 200
Mountlake Terrace, WA 98043-5263
Ph: (206) 623-0769, (425) 640-7333
www.ilgross.com

MARK T. SPEIDEL, STATE OF WASHINGTON, 43713, PROFESSIONAL STRUCTURAL ENGINEER 07/2024

CARRINGTON APARTMENTS DECK REPLACEMENT

2501 148th Ave SE
Bellevue, WA 98007

REVISIONS

NO	DATE	DESCRIPTION
1	12/27/24	PERMIT CORRECTIONS

TITLE

GENERAL STRUCTURAL NOTES

DESIGNED	VM
DRAWN	KMH
CHECKED	VM
DATE	07/22/2024
JOB NUMBER	

SHEET NO.

S1.0

SDCI REVIEW

PLAN NOTES

1. NEW DECK DIAPHRAGM SHALL BE 3/4" CDX PLYWOOD WITH MIN. PANEL INDEX OF 32/16, NAILED WITH 0.148 x 3" NAILS AT :
   6"oc AT ALL DIAPHRAGM BOUNDARIES AND SHEAR WALLS
   6"oc AT ALL PANEL EDGES (BLOCKING REQUIRED)
   12"oc AT FIELD
2. INDICATES SPAN DIRECTION AND EXTENT OF FLOOR JOISTS. PER PLAN. PROVIDE PT 2x10 @ 16"oc JOISTS.
3. INDICATES BEAM OR HEADER PER PLAN.
4. SEE SHEET S4.0 FOR TYPICAL WOOD FRAMING DETAILS
5. SEE 20/S4.0 FOR TYPICAL HANGER SCHEDULE
6. CONTRACTOR SHALL NOT DRILL THRU SHEAR WALL END STUDS OR BEAM SUPPORTS FOR MECHANICAL PENETRATIONS.

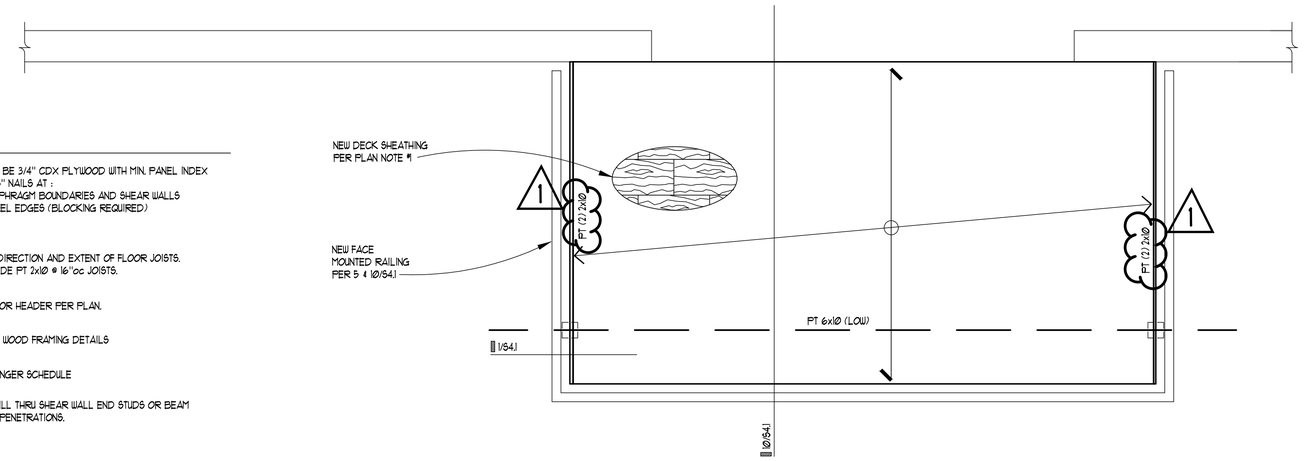

2 UPPER FLOOR DECK FRAMING PLAN

SCALE: 3/4" = 1'-0"

PLAN NOTES

1. PROVIDE NEW 4" CONCRETE SLAB ON GRADE w/ 6x6 - W2.1 x 2.1 WWM, U.O.N.
2. INDICATES NEW POST AND PAD FOOTING. SEE 8/S3.0
3. SEE DETAIL 12/S3.0 FOR TYP ANCHOR BOLT EMBEDMENT
4. SEE SHEET S3.0 FOR TYPICAL CONCRETE DETAILS

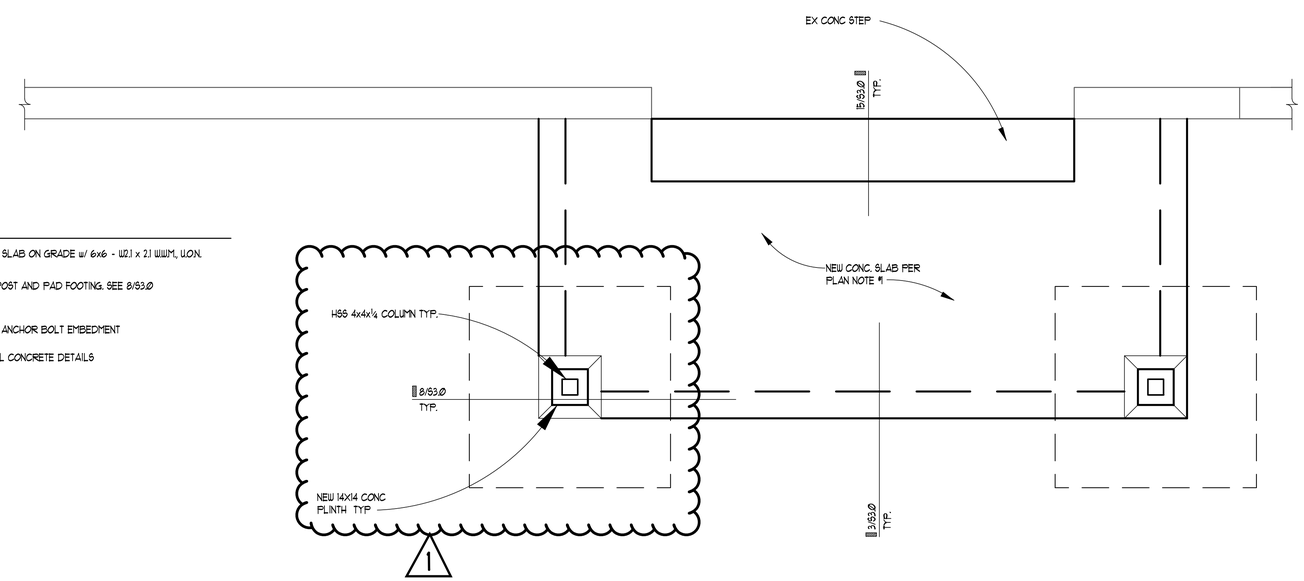

1 GROUND FLOOR DECK PLAN

SCALE: 3/4" = 1'-0"

I.L. GROSS
STRUCTURAL ENGINEERS

23914 56th Avenue W. ~ Suite 200
Mountlake Terrace, WA 98043-5263
Ph: (206) 623-0769, (425) 640-7333
www.ilgross.com

MARK T. SPEIDEL
STATE OF WASHINGTON
53713
STRUCTURAL ENGINEER
PROFESSIONAL ENGINEER
01/2024

CARRINGTON APARTMENTS DECK REPLACEMENT

2501 148th Ave SE
Bellevue, WA 98007

REVISIONS

NO	DATE	DESCRIPTION
1	12/21/24	PERMIT CORRECTIONS

TITLE

UPPER & GROUND FLOOR PLANS

DESIGNED	VM
DRAWN	KMH
CHECKED	VM
DATE	01/21/2024
JOB NUMBER	

SHEET NO.

S2.0

SDCI REVIEW

REINFORCING SPLICE AND DEVELOPMENT LENGTH SCHEDULE

(For Grade 60, Uncoated Bars, Normal Weight Concrete)

I — MINIMUM STRAIGHT DEVELOPMENT LENGTH (ℓ_d) ✳

f 'c = 3000 PSI

BAR SIZE	TOP BARS	OTHER BARS
# 3	22"	17"
# 4	29"	22"
# 5	37"	28"
# 6	44"	33"

✳ "TOP BARS" ARE HORIZONTAL BARS WITH MORE THAN 12" DEPTH OF CONCRETE CAST BELOW THEM.
IF CLEAR CONCRETE COVER IS NOT GREATER THAN THE DIAMETER OF THE BAR OR THE CENTER TO CENTER SPACING IS NOT GREATER THAN 3 BAR DIAMETERS, THEN VALUES SHALL BE INCREASED BY 43%.

II — MINIMUM LAP SPLICE LENGTHS (ℓ_s) ✳

f 'c = 3000 PSI

BAR SIZE	TOP BARS	OTHER BARS
# 3	29"	21"
# 4	38"	27"
# 5	48"	34"
# 6	58"	41"

SPLICES IN HORIZONTAL REINFORCING SHALL NOT OCCUR IN BOTH CURTAINS OF REINFORCING AT THE SAME LOCATION.

III — MINIMUM EMBEDMENT LENGTHS (ℓ_{dh}) FOR STANDARD END HOOKS

A. for general uses:

BAR SIZE	f 'c = 3000 PSI
# 3	7"
# 4	9"
# 5	11"
# 6	13"

1. SIDE COVER MUST BE EQUAL TO OR GREATER THAN 2½".
2. END COVER FOR 90° HOOKS MUST BE EQUAL TO OR GREATER THAN 2".
3. 90° HOOKS ONLY

6

2

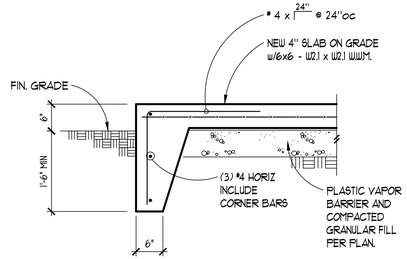

TYPICAL TURNED DOWN SLAB EDGE 3

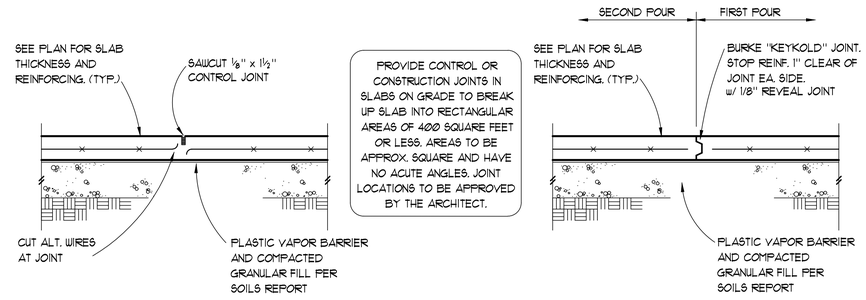

CONTROL JOINT

CONSTRUCTION JOINT

TYPICAL SLAB ON GRADE JOINTS 5

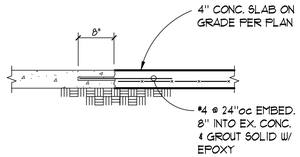

NEW TO EX SLAB CONNECTION 7

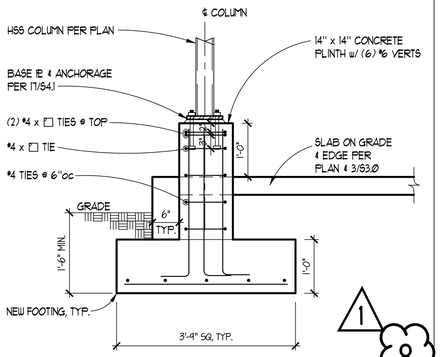

9

10

11

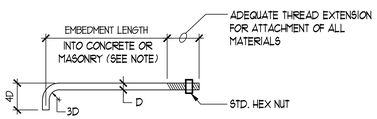

BOLT DIA. 'D'	MINIMUM EMBEDMENT	
	ANCHOR BOLTS IN HORIZ. SURFACE	ANCHOR BOLTS IN VERT. SURFACE
½"	5"	8"
⅝"	5"	8"
¾"	5"	8"

NOTE: ANCHOR BOLT EMBEDMENT IN VERTICAL SURFACE APPLIES TO CONCRETE ONLY.

TYP. ANCHOR BOLT 12

13

14

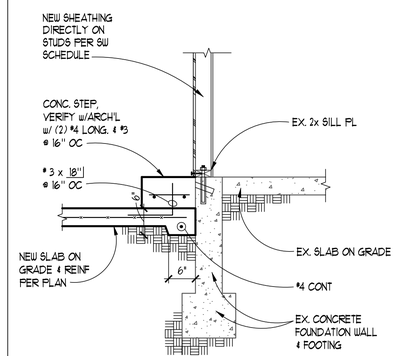

15

17

18

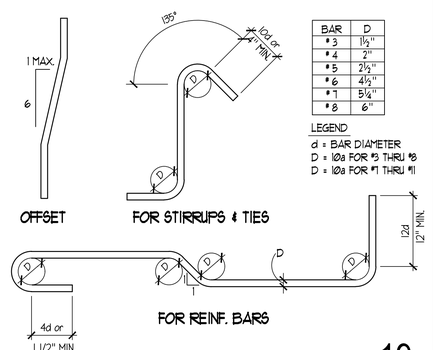

BAR	D
# 3	1½"
# 4	2"
# 5	2½"
# 6	4½"
# 7	5¼"
# 8	6"

LEGEND
d = BAR DIAMETER
D = 10d FOR #3 THRU #8
D = 10d FOR #7 THRU #11

REBAR BENDING SCHEDULE 19

20

I.L. GROSS STRUCTURAL ENGINEERS
23914 56th Avenue W. ~ Suite 200
Mountlake Terrace, WA 98043-5263
Ph: (206) 623-0769, (425) 640-7333
www.ilgross.com

MARK T. SPEIDER — STATE OF WASHINGTON — 53713 — STRUCTURAL ENGINEER — PROFESSIONAL ENGINEER

07/2024

CARRINGTON APARTMENTS DECK REPLACEMENT

2501 148th Ave SE
Bellevue, WA 98007

REVISIONS

NO	DATE	DESCRIPTION
1	12/27/24	PERMIT CORRECTIONS

TITLE

CONCRETE DETAILS

DESIGNED	VM
DRAWN	KMH
CHECKED	VM
DATE	07/22/2024
JOB NUMBER	

SHEET NO.

S3.0

SDCI REVIEW

1

2

3

4

5

6

7

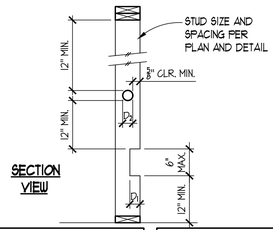

BEARING WALLS		
STUD SIZE	MAX. D_1 (NOTCH)	MAX. D_2 (NOTCH)
2x4 & 3x4	3/4"	1 1/4"
2x6	1 1/4"	2 1/4"
2x8	1 3/4"	3"

NON-BEARING WALLS		
STUD SIZE	MAX. D_1 (NOTCH)	MAX. D_2 (NOTCH)
2x4 & 3x4	1 1/4"	2"
2x6	2 1/4"	3 1/4"
2x8	3"	4 1/4"

NOTE: HOLE AND NOTCH SIZE FOR NON-BEARING WALLS MAY BE USED FOR BEARING WALLS IF REQUIRED NUMBER OF STUDS ARE DOUBLED. THIS MAY ONLY BE USED AT TWO CONSECUTIVE STUDS IN ANY ONE WALL.

ALLOWABLE HOLES & NOTCHES IN STUDS

8

9

10

11

12

13

14

15

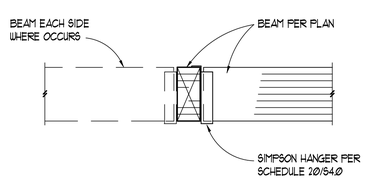

16

17

18

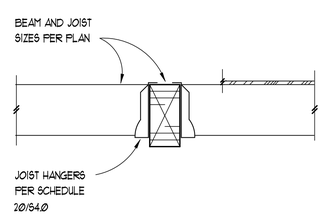

TYPICAL INTERIOR BEAM SECTION

19

TYPICAL HANGER SCHEDULE

BEAM SIZE	HANGER REQUIRED	CAP. (Kips)
(2) 2x10 OR LESS	U210-2 (OR SIM)	1.86
(2) 2X12	HU212-2 (NAIL ALL HOLES)	2.95
3 1/2" x 11 7/8" LVL or PSL	HUCQ412-SDS	5.56
5 1/4x11 7/8" LVL OR PSL	HGU55.50/12	9.15
5 1/8X 12" (OR 10 1/2") GLB	HGU55.25/10	9.1
3 1/8x12" (OR 10 1/2") GLB	HUCQ210-2-SDS	4.95
2x SAWN RAFTERS	LU (OR LUS) SERIES	1.06
11 7/8" PLYWD WEB JOISTS	IUS OR ITS HANGERS	1.23
2x12 JOISTS	U212 OR HU212TF	1.24

HANGERS SPECIFIED IN SCHEDULE OR ON PLANS ARE MANUFACTURED BY SIMPSON STRONG TIE, INC. UNLESS OTHERWISE NOTED. CAPACITIES ARE BASED ON THE MOST RECENT CATALOGUE AND ICC REPORTS FOR THE MODELS LISTED.

ALTERNATE HANGERS MAY BE SUBSTITUTED AT THE CONTRACTOR OR OWNER'S OPTION, PROVIDED THEY ARE APPROVED BY THE ENGINEER OF RECORD AND HAVE A CURRENT ICC REPORT STATING THEIR CAPACITY MEETS OR EXCEEDS THE DESIGN CAPACITY LISTED ABOVE.

DESIGN CAPACITIES LISTED ARE BASED ON Douglas Fir FRAMING LUMBER AS STATED IN THE GENERAL STRUCTURAL NOTES AND GENERAL FLOOR LOADING.

20

I.L. GROSS
STRUCTURAL
ENGINEERS

23914 56th Avenue W. ~ Suite 200
Mountlake Terrace, WA 98043-5263
Ph: (206) 623-0769, (425) 640-7333
www.ilgross.com

MARK T. SPEIDEL
STATE OF WASHINGTON
23713
STRUCTURAL ENGINEER
PROFESSIONAL ENGINEER

07/2024

CARRINGTON APARTMENTS DECK REPLACEMENT

2501 148th Ave SE
Bellevue, WA 98007

REVISIONS

NO	DATE	DESCRIPTION
1	12/27/24	PERMIT CORRECTIONS

TITLE

TYPICAL WOOD DETAILS

DESIGNED	VM
DRAWN	KMH
CHECKED	VM
DATE	07/22/2024
JOB NUMBER	

SHEET NO.

S4.0

SDCI REVIEW

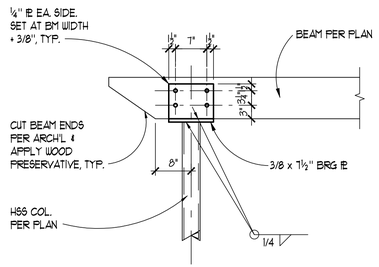

BEAM TO HSS COLUMN CONNECTION

1

2

3

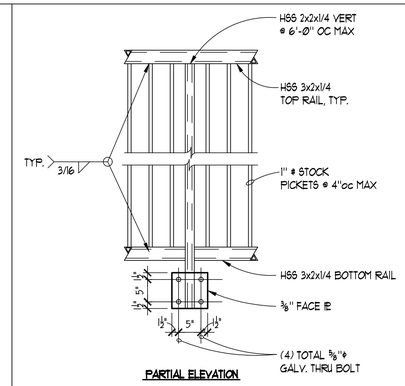

PARTIAL ELEVATION

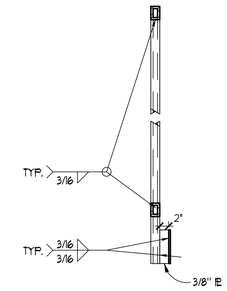

SECTION

5

6

7

8

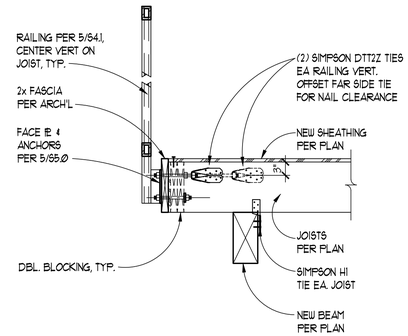

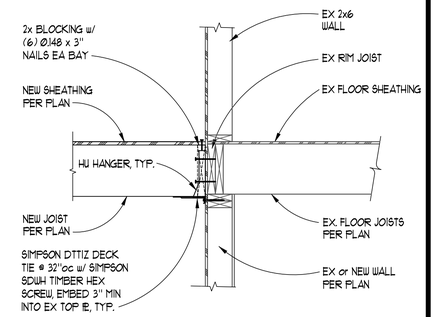

10

11

12

13

14

15

16

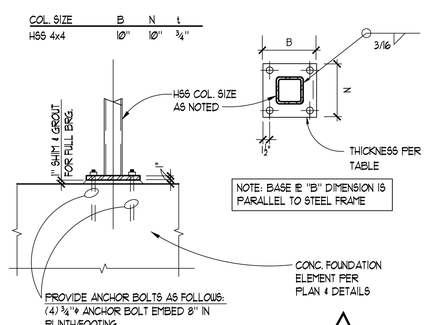

TYPICAL BASEPLATE AT TUBE COLUMNS

1

17

18

19

20

I.L. GROSS
STRUCTURAL
ENGINEERS

23914 56th Avenue W. ~ Suite 200
Mountlake Terrace, WA 98043-5263
Ph: (206) 623-0769, (425) 640-7333
www.ilgross.com

MARK T. SPECHT
STATE OF WASHINGTON
STRUCTURAL ENGINEER
PROFESSIONAL ENGINEER
53713

07/2024

CARRINGTON APARTMENTS DECK REPLACEMENT

2501 148th Ave SE
Bellevue, WA 98007

REVISIONS

NO	DATE	DESCRIPTION
1	12/27/24	PERMIT CORRECTIONS

TITLE

WOOD DETAILS

DESIGNED	VM
DRAWN	KPH
CHECKED	VM
DATE	07/22/2024
JOB NUMBER	

SHEET NO.

S4.1

SDCI REVIEW

INSTRUCTIONS TO BIDDERS

1.0 BIDDER RESPONSIBILITY CRITERIA

A. It is the intent of Owner to award a contract to a responsible bidder submitting the lowest responsive bid. Before award, the bidder must meet the following bidder responsibility criteria to be considered a responsible bidder. The bidder may be required by the Owner to submit documentation demonstrating compliance with the criteria. The bidder must:

1. Have a current certificate of registration as a contractor in compliance with chapter 18.27 RCW, which must have been in effect at the time of bid submittal;
2. Have a current Washington Unified Business Identifier (UBI) number;
3. If applicable, have industrial insurance coverage for the bidder's employees working in Washington as required in Title 51 RCW; an employment security department number as required in Title 50 RCW; and a state excise tax registration number as required in Title 82 RCW;
4. Not be disqualified from bidding on any public works contract under RCW 39.06.010 or 39.12.065(3);
5. Have received training on the requirements related to public works and prevailing wage under chapter 39.04.350 RCW and chapter 39.12 RCW or be listed as exempt by the department of labor and industries on its website; and
6. Within the three-year period immediately preceding the date of the bid solicitation, not have been determined by a final and binding citation and notice of assessment issued by the department of labor and industries or through a civil judgment entered by a court of limited or general jurisdiction to have willfully violated, as defined in RCW 49.48.082, any provision of chapter 49.46, 49.48, or 49.52 RCW;
7. Before award of a public works contract, a bidder shall submit to the contracting agency a signed statement in accordance with RCW 9A.72.085 verifying under penalty of perjury that the bidder is in compliance with the responsible bidder criteria requirement of subsection A, 6 of this section.

1.1 SUBCONTRACTOR RESPONSIBILITY

A. The Contractor shall include the language of this section in each of its first tier subcontracts, and shall require each of its subcontractors to include the same language of this section in each of their subcontracts, adjusting only as necessary the terms used for the contracting parties. Upon request of the Owner, the Contractor shall promptly provide documentation to the Owner demonstrating that the subcontractor meets the subcontractor responsibility criteria below. The requirements of this section apply to all subcontractors regardless of tier.

B. At the time of subcontract execution, the Contractor shall verify that each of its first tier subcontractors meets the following bidder responsibility criteria:

1. Have a current certificate of registration in compliance with chapter 18.27 RCW, which must have been in effect at the time of subcontract bid submittal;
2. Have a current Washington Unified Business Identifier (UBI) number;
3. If applicable, have:

    a. Have Industrial Insurance (workers' compensation) coverage for the subcontractor's employees working in Washington, as required in Title 51 RCW;
    b. A Washington Employment Security Department number, as required in Title 50 RCW;

c. A Washington Department of Revenue state excise tax registration number, as required in Title 82 RCW;
d. An electrical contractor license, if required by Chapter 19.28 RCW;
e. An elevator contractor license, if required by Chapter 70.87 RCW.

4. Not be disqualified from bidding on any public works contract under RCW 39.06.010 or 39.12.065 (3);
5. Have received training on the requirements related to public works and prevailing wage under chapter 39.04.350 RCW and chapter 39.12 RCW or be listed as exempt by the department of labor and industries on its website; and
6. Within the three-year period immediately preceding the date of the bid solicitation, not have been determined by a final and binding citation and notice of assessment issued by the department of labor and industries or through a civil judgment entered by a court of limited or general jurisdiction to have willfully violated, as defined in RCW 49.48.082, any provision of chapter 49.46, 49.48, or 49.52 RCW.

1.2 SUPPLEMENTAL BIDDER RESPONSIBILITY CRITERIA

A. RCW 39.04.350(2) specifically authorizes municipalities to adopt relevant supplement criteria for determining bidder responsibility applicable to a particular project which the bidder must meet.

B. For the work in this project a responsible/qualified Bidder must meet the following standards:

1. Have a current certificate of registration as a contractor, in compliance with chapter 18.27 RCW, for the last three years under the same business name;
2. Have a good record of past performance that includes, but is not limited to, high quality work, ability to complete projects on time, contractor's integrity, compliance with public policy, financial, contractual and tax obligations, as well as Federal and State rules and regulations in performing construction contracts.
3. Have a current Experience Modification Rate (EMR) of 1.0 or less, or an average EMR rate of 1.0 or less over the last three years. The requirement may, at the Owner's sole discretion, be waived on review of a written explanation that includes details of accidents, L&I records, a Loss Ratio Report for the last five years, costs, dates of events, and changes that have been made by the contractor to reduce accidents. A current company Safety Plan shall also be reviewed.
4. Bidder shall provide evidence of previous successful completion of deck replacement projects, of similar scope and complexity. Poor performance, lack or response, or failure to complete projects successfully within the contract time may be grounds for the rejection of bidder.

C. Subcontractors shall have had three years minimum experience licensed in Washington State under the same business name in the specific specialty contracting business.

1.3 PREPARATION OF BIDS – CONSTRUCTION

A. Bids must be submitted on the Bid Form furnished by the Owner.

B. All fields and questions on required forms must be fully answered and complete. Failure to do so may result in the bid being declared non-responsive.

C. Bidders shall acknowledge receipt of all addenda to this solicitation by inserting the addenda numbers in the space provided on the Bid Form. Failure to do so may result in the bid being declared non-responsive.

1. Bidder is responsible for checking KCHA's website for addenda prior to submitting bid.

D. In order for a bid to be considered responsive, bidders must submit the following signed documents with their bid package:

1. Bid Form
2. Bidder's Information Form

E. The Bidder agrees to hold the base bid prices for sixty (60) days from date of bid opening.

1.4 AMENDMENTS TO INVITATION TO BID

A. If this solicitation is amended, then all terms and conditions which are not modified remain unchanged.

B. Bidders shall acknowledge receipt of all addenda to this solicitation by inserting the addenda numbers in the space provided on the Bid Form. Failure to do so may result in the bid being declared non-responsive.

1. Bidder is responsible for checking KCHA's website for addenda prior to submitting bid.
2. Addenda will not be issued later than three (3) calendar days before the deadline for receipt of Bids except Addendum withdrawing the request for Bids or extending the deadline for receipt of Bids.

1.5 PRE-BID MEETING

A. All potential bidders are strongly encouraged to attend. Oral statements may not be relied upon and will not be binding or legally effective.

1.6 EXAMINATION OF PLANS, SPECIFICATIONS, AND SITE

A. Before submitting a bid, the Bidder shall carefully examine each component of the Contract Documents prepared for the Work and any other available supporting data so as to be thoroughly familiar with all the requirements.

B. The Bidder shall obtain copies of all agencies and associations guidelines and standards cited in the Contract Documents and necessary to perform the Work, including full size reproductions of material provided by Owner, at their own expense.

C. The Bidder shall make a thorough and reasonable examination of the project site, facility and conditions under which the Work is to be performed, including but not limited to: Building access; resident occupancy; fire lanes; landscaping; obstacles and character of materials which may be encountered; traffic conditions; public and private utilities; the availability and cost of labor; and available facilities for transportation, handling, and storage of materials and equipment.

1.7 EXPLANATION TO PROSPECTIVE BIDDERS

A. Any prospective bidder desiring an explanation or interpretation of the solicitation, drawings, specifications, etc., must submit a request in writing to the Owner seven (7) calendar days before the bid due date. Oral explanations or instructions given before the award of a contract will not be binding. Questions shall be submitted to:

Michelle Jackson
King County Housing Authority
600 Andover Park W
Tukwila, WA 98188
Email: MichelleJ@kcha.org

1.8 PREVAILING WAGES

A. Contractor shall pay no less than the Washington State Department of Labor and Industries (L&I) prevailing rate of wages to all workers, laborers, or mechanics employed in the performance of any part of the Work in accordance with RCW 39.12 and the rules and regulations of L&I. The schedule of prevailing wage rates for the locality or localities of the Work is determined by the Industrial Statistician of L&I. It is the Contractor's responsibility to verify the applicable prevailing wage rate.

B.

1. L&I prevailing wage rates may be found at https://lni.wa.gov/licensing-permits/public-works-projects/prevailing-wage-rates/
2. The Owner has determined that the work meets the definition of residential construction.
3. The prevailing wage rates publication date is determined by the bid due date.
4. The work is to be performed in King County.
5. A copy of the prevailing wage rates is available at KCHA.
6. A copy of the prevailing wage rates may be mailed on request.

1.9 TAXES

A. All taxes imposed by law shall be included in the bid amount. The Contractor shall pay the WSST to the Department of Revenue and shall furnish proof of payment to the Owner if requested.

B. The retail sales tax does not apply to the gross contract price as indicated in WAC 458-20-17001.

C. Prime and subcontractors are required to pay retail sales tax upon all purchases of materials, including prefabricated and precast items, equipment, leases or rentals of tools, consumables, and other tangible personal property which is installed, applied, attached, or otherwise incorporated in their work.

1.10 ASSURANCE OF COMPLETION

A. Payment and performance bonds for 100% of the Contract Sum, including all Change Orders and taxes imposed by law, shall be furnished for the Work, and shall be in a form acceptable to the Owner.

1.11 BID ERROR

A. In the event Bidder discovers an error in its bid, the Bidder may, under certain conditions and if before the date and time that bids are due, modify, their bid, as detailed below:

1. Prior to Date and Time Bids are Due:

   a. A Bidder may withdraw its bid at any time prior to the date and time bids are due upon written request.
   b. After withdrawing an original submitted bid, a Bidder may modify and resubmit its bid at any time prior to the date and time bids are due.

2. After the Date and Time Bids are Due:

   a. A bidder who submits an erroneous low bid may withdraw the bid. The bid withdrawal is permissible if there was an obvious error in the low bid, and the mistake is readily apparent from the bid itself.
   b. Notification: Provide to the Owner, within 24 hours of bid opening, written notification of the bidder's intent to withdraw the bid due to error.
   c. Documentation: Provide to the Owner within 48 hours of bid opening, documentation sufficient in content to justify bid withdrawal to the satisfaction of the Owner. Include description and evidence of the error.
   d. Approval: the Owner will approve or reject the request for withdrawal in writing.
   e. Any low bidder who withdraws its bid is prohibited from bidding on the same project if it is subsequently re-solicited.

1.12 ADDITIVE OR DEDUCTIVE BID ITEMS

A. The low bid, for purposes of award, shall be the lowest responsive bid from a qualified responsible bidder offering the low aggregate amount for the base bid, plus additive or deductive bid alternates selected by the Owner.

1.13 BID EVALUATION

A. Responsive Bids: A bid will be considered responsive if it meets the conditions of the solicitation, in addition to but not limited to the following requirements:

1. Bid is received not later than the time and date specified.
2. Bid is submitted in the proper format on the form(s) provided.
3. Bid includes the complete scope of work as defined in bid package.
4. Bid does not include any exclusions or qualifications.
5. Bid includes Unit and Lump Sum Costs as listed in Proposal Form.
6. Forms are complete.

B. After bid opening, bids will be checked for correctness of bid item prices, extensions and the total bid price. Discrepancies shall be resolved by accepting the bid item prices and the corrected extensions and total bid price.

C. Responsible Bidders: the Owner will award contracts only to responsible bidders who demonstrate the ability to successfully perform under the terms and conditions as set forth in the Contract Documents and have successfully completed projects similar in scope and complexity.

1. Bidders must demonstrate relevant experience on similar types of projects and submit detailed information as required on the Bidder Information Form.

D. The Owner reserves the right to contact references and investigate past performance and qualifications of the Bidder, subcontractor, and project team members, including contacting third parties and/or the references provided by the Bidder.

1. The Owner may contact references for other projects including those the Bidder did not identify and/or provided references.
2. References may be asked to rate the performance of and describe their experience with project team members and subcontractors. Bidder Information may be solicited and evaluated on the following subjects: type and features of work; overall quality of project performance and quality of work; experience and technical knowledge and competence of the Bidder and Project Team Members; ability, capacity and skill to perform the Work; ability to manage submittals, requests for information, prevailing wage filings, and other paperwork; compliance with laws, ordinances, and contract provisions; and other information as deemed necessary.
3. Poor reference(s) may be justification to determine a Bidder is not responsible.

E. At the Owner's request, provide any additional explanation or information, which would assist in evaluating the qualifications of the Bidder, subcontractors, project team members, and bid price.

F. The Owner will verify information submitted and if the lowest bidder is determined to be “not responsible,” the Owner will issue, in writing, the specific reasons for this determination. The bidder may appeal this decision. The appeal must be in writing and shall be delivered to the Owner within two business days. The appeal may include additional information that was not included in the original bid documents. KCHA will make a final determination after the receipt of the appeal. The final determination may not be appealed.

1.14 CONTRACT AWARD

A. Bonding and Insurance: Contract award will be contingent on ability to secure payment/performance bonding, and Contractor’s ability to meet the Owner insurance requirements as detailed in the Bid Documents.

B. Bonding, insurance and an approved Statement of Intent to Pay Prevailing Wages shall be submitted to the Owner within 14 days of contract award. A Notice to Proceed shall be issued immediately after receipt.

C. Right to Reject Bids/Waiver: The Owner reserves the right to reject any or all bids or to waive any informalities or irregularities in the bidding.

D. Retainage Funds: The Owner will not pay interest to the Contractor for accounts where retainage funds are maintained by the Owner. As part of the procurement by which the Contractor was selected for this work, the Contractor agrees to waive any other options and has made allowances for this waiver.

GENERAL CONDITIONS

PART 1 - GENERAL PROVISIONS

1.1 DEFINITIONS

A. “Authority Having Jurisdiction (AHJ)”: A federal, state, local, or other regional department, or an individual such as a fire official, labor department, health department, building official, or other individual having statutory authority.

B. "Contract Documents" means the Instructions to Bidders, Specifications, Plans, General Conditions, Prevailing Wage Rates, Bid Form, Contract Form, other Special Forms, Drawings and Specifications, and all Addenda and modifications thereof.

C. "Contract Sum" is the total amount payable by Owner to Contractor for performance of the Work in accordance with the Contract Documents.

D. "Contract Time" is the number of consecutive Days allotted in the Contract Documents for achieving completion of the Work.

E. "Contracting Officer" means the person delegated the authority by King County Housing Authority to enter into, and/or terminate this Contract. The term includes any successor Contracting Officer and any duly authorized representative of the Contracting Officer.

F. "Contractor" means the person or other entity entering into the Contract with King County Housing Authority to perform all of the services or work required under the Contract.

G. "Day" means calendar day, unless otherwise specified.

H. "Final Acceptance" means the acceptance by Owner that the Contractor has completed the requirements of the Contract Documents.

I. “Force Majeure” means those acts entitling Contractor to request an equitable adjustment in the Contract Time, including, but not limited to, unusually severe weather conditions which could not have been reasonably anticipated.

J. "Furnish": Supply and deliver to Project site, ready for unloading, unpacking, assembly, installation, and similar operations.

K. "Install": Operations at Project site including unloading, temporarily storing, unpacking, assembling, erecting, placing, anchoring, applying, working to dimension, finishing, curing, protecting, cleaning, and similar operations.

L. “Liquidated Damages” means the amount prescribed in the Contract Documents to be deducted from any payments due or to become due Contractor, for each day's delay in completion of the Work beyond the time allowed in the Contract Documents as stated in the Notice to Proceed, plus any extensions of such time.

M. “Manager” means the person who is an authorized agent of the King County Housing Authority to administer the Contract.

N. "Notice to Proceed" means a notice from Owner to Contractor that defines the date on which the Contract Time begins to run.

O. "Owner" means the King County Housing Authority or its authorized representative with the authority to enter into, administer, and/or terminate the Work in accordance with the Contract Documents and make related determinations and findings.

P. “Property Manager” means the property management company, its officers and employees.

Q. "Provide": Furnish and install, complete and ready for the intended use.

R. "Subcontract" means any contract, purchase order, or other purchase agreement, including modifications and change orders to the foregoing, entered into by a Subcontractor to furnish supplies, materials, equipment, and services for the performance of the prime Contract or a subcontract.

S. "Subcontractor" means any supplier, vendor, or firm that furnishes supplies, materials, equipment, or services to or for the Contractor or another Subcontractor.

"Work" means the construction and services required by the Contract Documents, and includes, but is not limited to, labor, materials, supplies, equipment, services, permits, and the manufacture and fabrication of components, performed, furnished, or provided in accordance with the Contract Documents.

1.2 EXECUTION AND INTENT

A. The intent of the Specifications and Drawings is to describe a complete Project to be constructed in accordance with the Contract Documents. Contractor shall furnish all labor, materials, equipment, tools, transportation, permits, and supplies, and perform the Work required in accordance with the Contract Documents.

B. All work is to be executed in accordance with the Building Codes, as adopted by the Authority Having Jurisdiction, and other applicable codes and generally accepted industry standards. All products and materials are to be new and handled and applied in accordance with the manufacturer's recommendations.

C. Contractor makes the following representations to Owner:

1. The Contract Sum is reasonable compensation for the Work and the Contract Time is adequate for the performance of the Work, as represented by the Contract Documents;
2. Contractor has carefully reviewed the Contract Documents, had an opportunity to visit and examine the Project site, has become familiar with the local conditions in which the Work is to be performed, and has satisfied itself as to the nature, location, character, quality and quantity of the Work, the labor, materials, equipment, goods, supplies, work, permits, services and other items to be furnished and all other requirements of the Contract Documents, as well as the surface and subsurface conditions and other matters that may be encountered at the Project site or affect performance of the Work or the cost or difficulty thereof.

D. The Contract Documents are complementary. What is required by one part of the Contract Documents shall be binding as if required by all. Anything mentioned in the Specifications and not shown on the Drawings, or shown on the Drawings and not mentioned in the Specifications, shall be of like effect as if shown or mentioned in both.

PART 2 - INSURANCE AND BONDS

2.1 INSURANCE REQUIREMENTS FOR BUILDING TRADES CONTRACTORS

A. Contractor shall procure and maintain for the duration of the contract insurance against claims for injuries to persons or damages to property that may arise from or in connection with the performance of the work hereunder by the Contractor, his agents, representatives, employees or Subcontractors.

2.2 MINIMUM SCOPE OF INSURANCE

A. Contractors shall maintain coverages no less than:

1. Insurance Services Office Commercial General Liability coverage including Products/Completed Operations.
2. Insurance Services Office covering Automobile Liability, code 1 (any auto).
3. Workers' Compensation insurance as required by State law and Employer's Liability Insurance.

2.3 MINIMUM LIMITS OF INSURANCE

A. Contractor shall maintain limits no less than:

1. General Liability: $1,000,000 per occurrence for bodily injury, personal injury and property damage. If Commercial General Liability Insurance or other form with a general aggregate limit is used, either the general aggregate limit shall apply separately to this project/location or the general aggregate limit of $2,000,000.
2. Automobile Liability: $1,000,000 per accident for bodily injury and property damage.
3. Employer's Liability: $1,000,000 per accident for bodily injury/sickness or disease.

2.4 DEDUCTIBLES AND SELF INSURED RETENTION

A. Any deductibles or self-insured retentions must be declared to and approved by the Owner. At the option of the Owner, either: the insurer shall reduce or eliminate such deductibles or self-insured retentions as respects the Owner, its officers, officials, employees and volunteers; or the Contractor shall provide a financial guarantee satisfactory to the Owner guaranteeing payment of losses and related investigations, claim administration and defense expenses. **NOTE: If this contract deals with hazardous materials or activities (i.e. lead based paint, asbestos, armed security guards) additional provisions covering those exposures must be included in order to protect the Owner's interests.**

2.5 OTHER INSURANCE PROVISIONS

A. The policies are to contain, or be endorsed to contain, the following provisions:

1. The Owner, the Property Manager, its officers, officials, employees, partners, agents and volunteers are to be covered as additional insureds under a "completed operations" type of additional insured endorsement with respect to general liability arising out of work or operations performed by or on behalf of the Contractor including materials, parts or equipment furnished in connection with such work or operations. The endorsement(s) effectuating the foregoing additional insured coverage shall be ISO form CG 20 10 11 85, or CG 20 10 10 01 issued concurrently with CG 20 37 10 01, or their equivalent as long as it provides additional insured coverage, without limitation, for completed operations; (ii) automobile liability arising out of vehicles owned, leased, hired, or borrowed by or on behalf of the Contractor; (iii) any insurance written on a claims made basis, shall have a retroactive date that coincides with, or precede, the commencement of any work under this contract. Evidence of such coverage shall be maintained for a minimum of six (_6_) years beyond the expiration of the project.
2. King County will not accept Certificates of Insurance Alone. Improperly Completed Endorsements will be returned to your insured for correction by an authorized representative of the insurance company.
3. For any claims related to this project, the Contractor's insurance coverage shall be primary insurance as respects the Owner, its officers, officials, agents, partners, employees, and volunteers. Any insurance or self-insurance maintained or expired by the Owner, its officers, officials, agents, partners, employees, volunteers, or shall be excess of the Contractor's insurance and shall not contribute with it. King County Housing Authority's Insurance is Non-Contributory in Claims Settlement Funding.
4. The "General description of agreement(s) and/or activity(s) insured" shall include reference to the activity and/or to either specific King County Housing Authority's; project of site name, contract number, lease number, permit number or construction approval number.
5. Each insurance policy required by this clause shall be endorsed to state that coverage shall not be canceled or materially changed, except after thirty (30) days' [ten (10) days for non-payment of premium] prior written notice by certified mail, return receipt requested, has been given to the Owner.
6. Maintenance of the proper insurance for the duration of the contract is a material element of the contract. Material changes in the required coverage or cancellation of the coverage shall constitute a material breach of the contract.

2.6 ACCEPTABILITY OF INSURERS

A. Insurance is to be placed with insurers with a current A.M. Best's rating of no less than A-:VII. The name of the Insurance Company underwriting the coverage and its address shall be noted on the endorsement form. Contractors must provide written verification of their insurer's rating.

2.7 VERIFICATION OF COVERAGE

Contractor shall furnish the Owner with original certificates and amendatory endorsements effecting coverage required by this clause. All certificates and endorsements are to be received and approved by the Owner before work commences in sufficient time to permit contractor to remedy any deficiencies. The Owner reserves the right to require complete, certified copies of all required insurance policies or pertinent parts thereof, including endorsements affecting the coverage required by these specifications at any time.

2.8 SUBCONTRACTORS

A. Subcontractors shall include the Contractor as additional insured under their policies. All coverage's for subcontractors shall be subject to all of the requirements stated herein. Contractor shall be responsible for the adequacy of required coverages for subcontractors, and compile related certificates of insurance and endorsements evidencing subcontractors' compliance.

2.9 PAYMENT AND PERFORMANCE BONDS

A. Payment and performance bonds for 100% of the Contract Award Amount shall be furnished for the Work, using the Payment Bond and Performance Bond form AIA – form A312. Change order increases of cumulative 15% increments require revisions to the bond to match the new Contract Sum.

PART 3 - PERFORMANCE

3.1 CONTRACTOR CONTROL AND SUPERVISION

A. Contractor shall be solely responsible for, and have control over construction means, methods, techniques, sequences, and procedures and for coordinating all portions of the Work, and shall be responsible to Owner for acts and omissions of Contractor, Subcontractors, and their employees and agents.

B. Contractor shall enforce strict discipline and good order among Contractor's employees and other persons performing the Work. Contractor shall not permit employment of persons not skilled in tasks assigned to them. Owner may, by Notice, request Contractor to remove from the Work or Project site any employee Owner reasonably deems incompetent, careless, or otherwise objectionable.

C. The Contractor shall perform on the site, and with its own organization, work equivalent to at least 12% of the total amount of work to be performed under the contract.

D. Work Hours: The Contractor's allowable hours of operation shall be limited to those hours between 8:00 A.M. and 6:00 P.M. Monday to Friday excluding public holidays.

3.2 PERMITS, FEES, AND NOTICES

A. Unless otherwise provided in the Contract Documents, Contractor shall pay for and obtain all permits, licenses, and coordinate inspections necessary for proper execution and completion of the Work. Prior to final payment, the approved, signed permits shall be delivered to Owner.

3.3 PREVAILING WAGES

A. Statutes of the State of Washington RCW 39.12 as amended shall apply to this contract. Requirements, in brief, are stated below:

1. There shall be paid each laborer or mechanic of the Contractor or sub-Contractor engaged in work on the project under this contract in the trade or occupation listed in the schedule of Wage Rates, as determined by the Department of Labor and Industries, not less than the hourly wage rate listed therein, regardless of any contractual relationship which may be alleged to exist between the Contractor and any sub-contractor and such laborers and mechanics.

2. The "prevailing rate or wage" contained in the wage determination include health and welfare fund contributions and other fringe benefits collectively bargained for by the various management and labor organizations. Prevailing wages shall be paid based on the most recent semi-annual list as required by the Department of Labor and Industries (L&I).
3. In case any dispute arises as to what are the prevailing rates for wages of work of a similar nature, and such disputes cannot be resolved by the parties involved, including labor and management representatives, the matter shall be referred for arbitration to the Director of the Department of Labor and Industries of the State of Washington, and the Director's decision shall be final and conclusive and binding on all parties involved in the dispute.

B. Before commencing the Work, Contractor shall file a statement of "Intent to Pay Prevailing Wages."

C. After completion of the Work, Contractor shall file an "Affidavit of Wages Paid."

3.4 EQUAL EMPLOYMENT OPPORTUNITY

A. During performance of the Work:

1. Contractor shall not discriminate against any employee or applicant for employment because of race, creed, color, national origin, sex, age, marital status, the presence of any physical, sensory, or mental disability, sexual orientation, Vietnam-era veteran status, disabled veteran status or political affiliation, nor commit any unfair practices as defined in RCW 49.60.
2. The Contractor shall take affirmative action to ensure that applicants are employed, and that employees are treated during employment without regard to their race, color, religion, sex, national origin, of any physical, sensory, or mental disability, sexual orientation, Vietnam-era veteran status, disabled veteran status, or political affiliation.
3. The Contractor shall give all notices and comply with all applicable laws, ordinances, rules, regulations and orders in regard to Equal Employment Opportunity including but not limited to Executive Order 11246, as amended, Section 503 of the Rehabilitation Act of 1973, as amended, and the rules, regulations, and orders of the Secretary of Labor. The Contractor shall include the terms of this Clause in every subcontract so that such term shall be binding on each Subcontractor.
4. Non-Discrimination R.C.W. 49.60: These special requirements establish minimum requirements for affirmative action and are intended to define and implement the basic discrimination provisions of these specifications. Failure to comply with these requirements may constitute grounds for application of contract default.

3.5 SAFETY PRECAUTIONS

A. In performing this contract, the Contractor shall provide for protecting the lives and health of employees and other persons; preventing damage to property, materials, supplies, and equipment; and avoid work interruptions. For these purposes, the Contractor shall:

1. Follow Washington Industrial Safety and Health Act (WISHA) regional directives and provide a site-specific safety program that will require an accident prevention and hazard analysis plan for the contractor and each subcontractor on the work site. The Contractor shall submit a site-specific safety plan to the Owner's representative prior to the initial scheduled construction meeting.
2. Provide adequate safety devices and measures including, but not limited to, the appropriate safety literature, notice, training, permits, placement and use of barricades, signs, signal lights, ladders, scaffolding, staging, runways, hoist, construction elevators, shoring, temporary lighting, grounded outlets, wiring, hazardous materials, vehicles, construction processes, and equipment required by Chapter 19.27 RCW, State Building Code (Uniform Building, Electrical, Mechanical, Fire, and Plumbing Codes); Chapter 212-12 WAC, Fire Marshal Standards, Chapter 49.17 RCW, WISHA; Chapter 296-155 WAC, Safety Standards for Construction Work; Chapter 296-65 WAC; WISHA Asbestos Standard; WAC 296-62-071, Respirator Standard; WAC 296-62, General Occupation Health Standards, WAC 296-24, General Safety and Health Standards, WAC 296-24, General Safety and Health Standards, Chapter 49.70 RCW, and Right to Know Act.
3. Comply with the State Environmental Policy Act (SEPA), Clean Air Act, Shoreline Management Act, and other applicable federal, state, and local statutes and regulations dealing with the prevention of environmental pollution and the preservation of public natural resources.
4. Post all permits, notices, and/or approvals in a conspicuous location at the construction site.

5. Provide any additional measures that the Owner determines to be reasonable and necessary for ensuring a safe environment in areas open to the public. Nothing in this part shall be construed as imposing a duty upon the Owner to prescribe safety conditions relating to employees, public, or agents of the Contractors.

B. Contractor to maintain safety records: Contractor shall maintain an accurate record of exposure data on all incidents relating to the Work resulting in death, traumatic injury, occupational disease, or damage to property, materials, supplies, or equipment. Contractor shall immediately report any such incident to Owner. Owner shall, at all times, have a right of access to all records of exposure.

C. Contractor to provide HazMat training: Contractor shall provide all persons working on the Project site with information and training on hazardous chemicals in their work at the time of their initial assignment, and whenever a new hazard is introduced into their work area.

1. Information. At a minimum, Contractor shall inform persons working on the Project site of:

a. WAC: The requirements of chapter 296-62 WAC, General Occupational Health Standards;
b. Presence of hazardous chemicals: Any operations in their work area where hazardous chemicals are present; and
c. Hazard communications program: The location and availability of written hazard communication programs, including the required list(s) of hazardous chemicals and material safety data sheets required by chapter 296-62 WAC.

2. Training. At a minimum, Contractor shall provide training for persons working on the Project site which includes:

a. Detecting hazardous chemicals: Methods and observations that may be used to detect the presence or release of a hazardous chemical in the work area (such as monitoring conducted by the employer, continuous monitoring devices, visual appearance or odor of hazardous chemicals when being released, etc.);
b. Hazards of chemicals: The physical and health hazards of the chemicals in the work area;
c. Protection from hazards: The measures such persons can take to protect themselves from these hazards, including specific procedures Contractor, or its Subcontractors, or others have implemented to protect those on the Project site from exposure to hazardous chemicals, such as appropriate work practices, emergency procedures, and personal protective equipment to be used; and
d. Hazard communications program: The details of the hazard communications program developed by Contractor, or its Subcontractors, including an explanation of the labeling system and the material safety data sheet, and how employees can obtain and use the appropriate hazard information.

D. Hazardous, toxic or harmful substances: Contractor's responsibility for hazardous, toxic, or harmful substances shall include the following duties:

1. Illegal use of dangerous substances: Contractor shall not keep, use, dispose, transport, generate, or sell on or about the Project site, any substances now or hereafter designated as, or which are subject to regulation as, hazardous, toxic, dangerous, or harmful by any federal, state or local law, regulation, statute or ordinance (hereinafter collectively referred to as "hazardous substances"), in violation of any such law, regulation, statute, or ordinance, but in no case shall any such hazardous substance be stored on the Project site.
2. Contractor notifications of spills, failures, inspections, and fines: Contractor shall promptly notify Owner of all spills or releases of any hazardous substances which are otherwise required to be reported to any regulatory agency and pay the cost of cleanup. Contractor shall promptly notify Owner of all failures to comply with any federal, state, or local law, regulation, or ordinance; all inspections of the Project site by any regulatory entity concerning the same; all regulatory orders or fines; and all responses or interim cleanup actions taken by or proposed to be taken by any government entity or private party on the Project site.

E. Public safety and traffic: All Work shall be performed with due regard for the safety of the public. Contractor shall perform the Work so as to cause a minimum of interruption of vehicular traffic or inconvenience to pedestrians. All arrangements to care for such traffic shall be Contractor's responsibilities. All expenses involved in the maintenance of traffic by way of detours shall be borne by Contractor.

F. Contractor to act in an emergency: In an emergency affecting the safety of life or the Work or of adjoining property, Contractor is permitted to act, at its discretion, to prevent such threatened loss or injury, and Contractor shall so act if so authorized or instructed.

G. No duty of safety by Owner: Nothing provided in this section shall be construed as imposing any duty upon Owner with regard to, or as constituting any express or implied assumption of control or responsibility over, Project site safety, or over any other safety conditions relating to employees or agents of Contractor or any of its Subcontractors, or the public.

3.6 INDEPENDENT CONTRACTOR

A. The Contractor and Owner agree the Contractor is an independent contractor with respect to the services provided pursuant to this Contract. Nothing in this Contract shall be considered to create a relationship of employer and employee between the parties hereto. Neither the Contractor nor any employee of the Contractor shall be entitled to any benefits accorded Owner employees by virtue of the services provided under this Contract. The Owner shall not be responsible for withholding or otherwise deducting federal income tax or social security or contributing to the State Industrial Insurance Program, or otherwise assuming the duties of an employer with respect to the Contractor, or any employees of the Contractor.

3.7 OPERATIONS, MATERIAL HANDLING, AND STORAGE AREAS

A. Contractor shall confine all operations, including storage of materials, to Owner-approved areas.

B. Contractor shall be responsible for the proper care and protection of its materials and equipment delivered to the Project site.

C. Contractor shall protect and be responsible for any damage or loss to the Work, or to the materials or equipment until the date of Final Acceptance, and shall repair or replace without cost to Owner any damage or loss that may occur.

3.8 PRIOR NOTICE OF EXCAVATION

A. Prior to any excavation Contractor shall engage a locate service for all underground facilities or utilities. Contractor shall pay all fees for locator services and pay for all damages caused by excavation.

3.9 UNFORESEEN PHYSICAL CONDITIONS

A. Notice requirement for concealed or unknown conditions: If Contractor encounters conditions at the site which are subsurface or otherwise concealed physical conditions which differ materially from those indicated in the Contract Documents, or unknown physical conditions of an unusual nature which differ materially from those ordinarily found to exist and generally recognized as inherent in construction activities of the character provided for in the Contract Documents, then Contractor shall give written notice to Owner promptly and in no event later than seven Days after the first observance of the conditions. Conditions shall not be disturbed prior to such notice.

B. Adjustment in Contract Time and Contract Sum: If such conditions differ materially and cause a change in Contractor's cost of, or time required for, performance of any part of the Work, the Contractor may be entitled to an equitable adjustment in the Contract Time or Contract Sum, or both, provided it makes a request therefore as provided in Part 5.

3.10 PROTECTION OF EXISTING STRUCTURES, EQUIPMENT, VEGETATION, UTILITIES, AND IMPROVEMENTS

A. Contractor shall protect from damage all existing conditions, including soils, structures, equipment, improvements, utilities, and vegetation at or near the Project site; and on adjacent property of a third party, the locations of which are made known to or should be known by Contractor. Contractor shall repair any damage, including that to the property of a third party, resulting from failure to comply with the requirements of the Contract Documents, any defects of equipment, material, workmanship or design furnished by the Contractor, or failure by Contractor or subcontractor at any tier to exercise reasonable care in performing the Work. If

Contractor fails or refuses to repair the damage promptly, Owner may have the necessary work performed and charge the cost to Contractor.

B. New work which connects to existing work shall correspond in all respects with that to which it connects and/or be similar to existing work unless otherwise required by the Specifications.

3.11 MATERIAL AND EQUIPMENT

A. All equipment, material, and articles incorporated into the Work shall be new and of the most suitable grade for the purpose intended, unless otherwise specifically provided in the Contract Documents. References in the Specifications to equipment, material, articles, or patented processes by trade name, make, or catalog number, shall be regarded as establishing a standard quality and shall not be construed as limiting competition. Contractor may, at its option, use any equipment, material, article, or process that, in the judgment of Owner, is equal to that named in the Specifications, unless otherwise specifically provided in the Contract Documents.

B. Substitutions shall be considered where qualities and attributes including, but not limited to, cost, performance, weight, size, durability, visual effect, and specific features and requirements indicated are deemed equal or better by the Owner at the Owner's sole discretion. All requests for substitutions shall be made in writing to Owner and shall not be deemed to be approved unless approved in writing by Owner.

3.12 CORRECTION OF NONCONFORMING WORK

A. Contractor shall promptly correct Work found by Owner not to conform to the requirements of the Contract Documents, whether observed before or after Final Acceptance.

B. If Contractor fails to correct nonconforming Work, Owner may replace, correct, or remove the nonconforming Work and charge the cost thereof to the Contractor.

3.13 CLEAN UP

A. Contractor shall at all times keep the Project site, including hauling routes, infrastructures, utilities, and storage areas, free from accumulations of waste materials. Before completing the Work, Contractor shall remove from the premises its rubbish, tools, scaffolding, equipment, and materials. Upon completing the Work, Contractor shall leave the Project site in a clean, neat, and orderly condition satisfactory to Owner. If Contractor fails to clean up as provided herein, and after reasonable notice from Owner, Owner may do so and the cost thereof shall be charged to Contractor.

3.14 SUBCONTRACTORS AND SUPPLIERS

A. Contractor shall utilize Subcontractors and suppliers which are experienced and qualified.

B. By appropriate written agreement, Contractor shall require each Subcontractor to be bound to Contractor by terms of those Contract Documents, and to assume toward Contractor all the obligations and responsibilities which Contractor assumes toward Owner in accordance with the Contract Documents. Each Subcontract shall preserve and protect the rights of Owner in accordance with the Contract Documents with respect to the Work to be performed by the Subcontractor so that subcontracting thereof will not prejudice such rights. Contractor shall require each Subcontractor to enter into similar agreements with Sub-subcontractors. However, nothing in this paragraph shall be construed to alter the contractual relations between Contractor and its Subcontractors with respect to insurance or bonds.

C. Contractor shall schedule, supervise, and coordinate the operations of all Subcontractors. No Subcontracting of any of the Work shall relieve Contractor from its responsibility for the performance of the Work in accordance with the Contract Documents or any other obligations of the Contract Documents.

D. It is the Contractor's responsibility to pay its Subcontractors and material suppliers on a timely basis. The Owner reserves the right to withhold a portion of the Contractor's payment if the Contractor fails to make timely payments to the Subcontractors and material suppliers.

E. The Contract Documents shall not be construed to create a contractual relationship of any kind between the Owner and any Subcontractor; or any persons other than Owner and Contractor.

F. The Contractor shall not enter into any subcontract with any subcontractor who has been suspended or debarred from participating in contracting programs by any agency of the United States Government or by any state, territory, or municipality.

3.15 INDEMNIFICATION

A. The Contractor hereby agrees to indemnify, defend, and hold harmless the Authority, its successors and assigns, director, officers, officials, employees, agents, partners and volunteers (all foregoing singly and collectively (Indemnities") from a and against any and all claims, losses, harm costs, liabilities, damages and expenses, including, but not limited to, reasonable attorney's fees arising or resulting from the performance of the services, or the acts or omissions of the Contractor its successors, and assigns, employees, subcontractors or anyone acting on the contractor's behalf in connection with this Contract or its performance of this Contract.

B. Provided, however, that the Contractor will not be required to indemnify, defend, or save harmless the indemnitee as provided in the preceding paragraphs of this section if the claim, suit, or action for injuries, death, or damages is caused by the sole negligence of the indemnitee. Where such claims, suites, or actions result from the concurrent negligence of (a) the indemnitee or the indemnitee's agents or employees and (b) the Contractor or the Contractor's agent or employee, the indemnity provisions provided in the proceeding paragraphs of this section shall be valid and enforceable only to the extent of the Contractor's negligence or the negligence of its agents and employees..

C. The foregoing indemnity is specifically and expressly intended to constitute a waiver of the Contractor's immunity under Washington's Industrial Insurance act, RCW Title 51. The parties acknowledge that these provisions were specifically negotiated and agreed upon by them. If any portion of this indemnity clause is invalid or unenforceable, it shall be deemed excised and the remaining portions of the clause shall be given full force and effect.

D. The Contractor hereby agrees to require all its Subcontractors or anyone acting under its direction or control or on its behalf in connection with or incidental to the performance of this Contract to execute an indemnity clause identical to the preceding clause, specifically naming the Owner as indemnity, and failure to do so shall constitute a material breach of this Contract by the Contractor.

3.16 PROHIBITION AGAINST LIENS

A. The Contractor is prohibited from placing a lien on the Owner's property. This prohibition shall apply to all subcontractors of any tier and all materials suppliers, in accordance with RCW 35.82.190.

3.17 DAMAGES FOR FAILURE TO ACHIEVE TIMELY COMPLETION

A. Liquidated Damages

1. Timely performance and completion of the Work is essential to Owner and time limits stated in the Contract Documents are of the essence. The liquidated damage amounts set forth will be assessed not as a penalty, but as liquidated damages for breach of the Contract Documents. This amount is fixed and agreed upon by and between the Contractor and Owner because of the impracticability and extreme difficulty of fixing and ascertaining the actual damages the Owner would in such event sustain. This amount shall be construed as the actual amount of damages sustained by the Owner, and may be retained by the Owner and deducted from any payments to the Contractor.
2. If different completion dates are specified in the contract for separate parts or stages of the work, the amount of liquidated damages shall be assessed on those parts or stages which are delayed.

3.18 WAIVER AND SEVERABILITY

A. The failure or delay of either party to insist on performance of any provision of the Contract, or to exercise any right or remedy available under the Contract, shall not be construed as a waiver of that provision, right, or remedy in any later instance. Waiver or breach of any provision of the Contract shall not be construed to be a

waiver of any other or subsequent breach and shall not be construed to be a modification of the terms of the Contract, unless the Contract is modified pursuant to the Clause entitled "Contract Modifications" herein.

B. If any provision of the Contract is or becomes void or unenforceable by operation of law, the remaining provisions shall be valid and enforceable.

PART 4 - PAYMENTS AND COMPLETION

4.1 CONTRACT SUM

A. The Contract Sum shall include all taxes imposed by law and properly chargeable to the Project, including sales tax. The Contractor shall pay the WSST to the Department of Revenue and shall furnish proof of payment to the Owner if requested.

B. The retail sales tax does not apply to the gross contract price.

C. Prime and subcontractors are required to pay retail sales tax upon all purchases of materials, including prefabricated and precast items, equipment, leases or rentals of tools, consumables, and other tangible personal property which is installed, applied, attached, or otherwise incorporated in their work.

4.2 APPLICATION FOR PAYMENT

A. At monthly intervals, unless determined otherwise by Owner, Contractor shall submit to Owner an Application for Payment for Work completed in accordance with the Contract Documents. Each application shall be supported by such substantiating data as Owner may require.

B. Each invoice shall include the following statement: "I hereby certify that the items listed are proper charges for materials, merchandise or services provided to the King County Housing Authority, and that all goods and/or services have been provided; that prevailing wages have been paid in accordance with the approved statements of intent filed with the Department of Labor and Industries; and that sub-contractors and/or suppliers have been paid, less earned retainage, as their interest appears in the last payment received."

C. Coordinate preparation of the Schedule of Values with preparation of Contractor's Construction Schedule. Each Application for Payment shall be consistent with previous applications and payments.

D. Owner shall retain 5% of the amount of each progress payment until 45 Days after Final Acceptance and receipt of all documents required by law or the Contract Documents, including releases by Washington State Employment Security Department and Washington State Department of Revenue, Department of Labor & Industries, and consent of surety to release of the retainage.

E. Payment for material delivered to site or stored off-site: If authorized by Owner, the Application for Payment may include request for payment for material delivered to the Project site and suitably stored, or for completed preparatory work. Payment may similarly be requested for material stored off the Project site, provided Contractor complies with or furnishes satisfactory evidence of the following:

1. Suitable facility or location: The material will be placed in a facility or location that is structurally sound, dry, lighted and suitable for the materials to be stored;
2. Facility or location within 50 miles of Project: The facility or location is located within a 50-mile radius of the Project. Other locations may be utilized, if approved in writing, by Owner;
3. Facility or location exclusive to Project's materials: Only materials for the Project are stored within the facility or location (or a secure portion of a facility or location set aside for the Project);
4. Insurance provided on materials in facility or location: Contractor furnishes Owner a certificate of insurance extending Contractor's insurance coverage for damage, fire, and theft to cover the full value of all materials stored, or in transit;
5. Facility or location locked and secure: The facility or location (or secure portion thereof) is continuously under lock and key, and only Contractor's authorized personnel shall have access;
6. Owner right of access to facility or location: Owner shall at all times have the right of access in company of Contractor;
7. Contractor assumes total responsibility for stored materials: Contractor and its surety assume total responsibility for the stored materials; and

8. Contractor provides documentation and Notice when materials moved to site: Contractor furnishes to Owner certified lists of materials stored, bills of lading, invoices, and other information as may be required, and shall also furnish Notice to Owner when materials are moved from storage to the Project site.

F. Waivers of Lien: With each Application for Payment, submit conditional waivers lien from every entity who is lawfully entitled to file a lien arising out of the Contract and related to the Work covered by the payment.

1. Submit partial waivers on each item for amount requested, before deduction for retainage, on each item.
2. When an application shows completion of an item, submit final or full waivers.
3. Owner reserves the right to designate which entities involved in the Work must submit waivers.

a. Submit final Application for Payment with or preceded by final waivers from every entity involved with performance of the Work covered by the application who is lawfully entitled to a lien.

G. Final Payment Application: Submit final Application for Payment with releases and close out supporting documentation.

H. Approved payments shall be mailed to the Contractor within 30 days.

4.3 FINAL COMPLETION, ACCEPTANCE, AND PAYMENT

A. The Owner shall make a final inspection of the Work on receipt of (1) written notice from the Contractor that the Work is ready for final inspection and (2) a final Application for Payment. When the Owner finds the Work acceptable and fully performed under the Contract Documents, and the Contractor has delivered to the Owner all warranties, permits, and operations manuals, the Owner will issue a Notice of Final Completion.

B. Acceptance of final payment by Contractor, or any Subcontractor, shall constitute a waiver and release to Owner of all claims by Contractor, or any such Subcontractor, for an increase in the Contract Sum or the Contract Time, and for every act or omission of Owner relating to or arising out of the Work, except for those Claims made in accordance with the procedures, including the time limits, set forth in PART 7 - .

PART 5 - CHANGES

5.1 CHANGE IN THE WORK

A. Owner may, at any time and without notice to Contractor's surety, order additions, deletions, revisions, or other changes in the Work. These changes in the Work shall be incorporated into the Contract Documents through the execution of Change Orders. If any change in the Work ordered by Owner causes an increase or decrease in the Contract Sum or the Contract Time, an equitable adjustment shall be made as provided in 5.2 and 5.3.

B. Pending agreement on the terms of the Change Order, Owner may direct Contractor to proceed immediately with the Change Order Work. Contractor shall not proceed with any change in the Work until it has obtained Owner's approval.

C. The Contractor agrees that any change in the Contract Amount or Contract Time provided in a Change Order is full and complete compensation to the Contractor for the change(s) to the work, deleted work, modified work, direct or indirect impact on the Contractor's schedule, and for any equitable adjustment or time extension to which the Contractor may be entitled to in this Change Order, pursuant to the Contract between the Owner and Contractor.

5.2 CHANGE IN THE CONTRACT SUM

A. Change Order Pricing - Fixed Price: When the fixed price or time and materials method is used to determine the value of any Work covered by a Change Order, or of a request for an equitable adjustment in the Contract Sum, the following procedures shall apply:

1. Contractor's Change Order proposal, or request for adjustment in the Contract Sum, shall be accompanied by a complete itemization of the costs, including labor, material, subcontractor costs, and overhead and profit. The costs shall be itemized in the manner set forth below, and shall be submitted on breakdown sheets with documentation in a form approved by Owner.
2. Any request for adjustment of Contract Sum shall include only the following items:

   a. Craft labor costs for Contractors and Subcontractors.

      1) Basic wages and benefits: Hourly rates and benefits according to applicable prevailing wages.
      2) Direct supervision shall not to exceed 15% of the cost of direct labor. No supervision markup shall be allowed for a working supervisor's hours.
      3) Worker's Insurance. Direct contributions to the State for industrial insurance, medical aid, and supplemental pension by the class and rates established by L&I.
      4) Federal Insurance. Direct contributions required by the Federal Insurance Compensation Act; Federal Unemployment Tax Act; and the State Unemployment Compensation Act.
      5) Safety and small tools: 4% of the sum of the amounts calculated in (1), (2), and (3) above.

   b. Material Costs: Material costs and applicable sales tax shall be developed from actual known costs, supplier quotations or standard industry pricing guides and shall consider all available discounts. Freight costs, express charges, or special delivery charges shall be itemized.
   c. Equipment Costs: Itemization of the type of equipment and the estimated or actual length of time the equipment appropriate for the Work is or will be used on the change in the Work. Costs will be allowed for equipment and applicable sales tax only if used solely for the changed Work, or for additional rental costs actually incurred by the Contractor. The Date Quest Rental Rate (Blue Book) shall be used as a basis for establishing rental rates of equipment not listed in the above sources. The maximum rate for standby equipment shall not exceed 50% of the applicable rate.
   d. Allowance for Overhead: This allowance shall compensate Contractor for all noncraft labor, temporary construction facilities, field engineering, schedule updating, as-built drawings, home office cost, B&O taxes, office engineering, estimating costs, additional overhead because of extended time and any other cost incidental to the change in the Work. This allowance shall be strictly limited in all cases an amount not to exceed the following:

      1) For Contractor, for any Work actually performed by Contractor's own forces, 16% of the cost.
      2) For each Subcontractor (including lower tier subcontractors), for any Work actually performed by its own forces, 16% of the cost.
      3) For Contractor, for any Work performed by its Subcontractor(s), 6% of the amount due each Subcontractor.
      4) For each Subcontractor, for any Work performed by its Subcontractor(s) of any lower tier, 5% of the amount due the sub-Subcontractor.

   e. Allowance for Profit:

      1) For Contractor or Subcontractor of any tier for work performed by their forces, 5% of the cost developed in accordance with subsections a, b & c above.
      2) For Contractor or Subcontractor of any tier for work performed by a subcontractor of a lower tier, 5% of the Subcontractor cost.

   f. Insurance or Bond Premium: The costs of any change or additional premium of Contractor's liability insurance and public works bond arising directly from the changed Work. The costs of any change in insurance or bond premium shall be added after overhead and profit are calculated.

B. Change Order Pricing - Unit Prices

1. Work on a unit-price basis as stated in the Specifications and at the price submitted in the Bid Form or as subsequently modified.

a. Unit prices shall include reimbursement for all direct and indirect costs of the Work, including overhead and profit, and bond and insurance costs; and
b. Quantities must be supported by field measurement verified by Owner.

5.3 CHANGE IN THE CONTRACT TIME

A. The Contract Time shall only be changed by a Change Order. Contractor shall immediately notify Owner, and shall include any request for a change in the Contract Time in its Change Order proposal.

B. If the time of Contractor's performance is changed due to an act of Force Majeure, Contractor shall request for an equitable adjustment in the Contract Time in writing within 24-hours of the occurrence.

PART 6 - CLAIMS AND DISPUTE RESOLUTION

6.1 CLAIMS PROCEDURE

A. If the parties fail to reach agreement regarding any dispute arising from the Contract Documents, Contractor's only remedy shall be to file a Claim with Owner within 30 Days from Owner's final offer.

B. The Claim shall be deemed to cover all changes in cost and time (including direct, indirect, impact, and consequential) to which Contractor may be entitled. It shall be fully substantiated and documented.

C. After Contractor has submitted a fully-documented Claim, Owner shall respond, in writing, to Contractor with a decision within 30 Days from the date the Claim is received.

D. Contractor shall proceed with performance of the Work pending final resolution of any Claim. Owner's written decision as set forth above shall be final and conclusive as to all matters set forth in the Claim.

E. Any Claim of the Contractor against the Owner for damages, additional compensation, or additional time, shall be conclusively deemed to have been waived by the Contractor unless timely made in accordance with the requirements of this section.

6.2 ARBITRATION

A. If Contractor disagrees with Owner's decision rendered in accordance with paragraph 6.1C, Contractor shall provide Owner with a written demand for arbitration. No demand for arbitration of any such Claim shall be made later than 30 Days after the date of Owner's decision on such Claim; failure to demand arbitration within said 30 Day period shall result in Owner's decision being final and binding upon Contractor and its Subcontractors.

1. Notice of the demand for arbitration shall be filed with the American Arbitration Association (AAA), with a copy provided to Owner. The parties shall negotiate or mediate under the Voluntary Construction Mediation Rules of the AAA, or mutually acceptable service.

B. All Claims arising out of the Work shall be resolved by arbitration. The judgment upon the arbitration award may be entered, or review of the award may occur, in the superior court having jurisdiction thereof. No independent legal action relating to or arising from the Work shall be maintained.

6.3 CLAIMS AUDITS

A. All Claims filed against Owner shall be subject to audit at any time following the filing of the Claim. Failure of Contractor, or Subcontractors of any tier, to maintain and retain sufficient records to allow Owner to verify all or a portion of the Claim or to permit Owner access to the books and records of Contractor, or Subcontractors of any tier, shall constitute a waiver of the Claim and shall bar any recovery.

1. In support of Owner audit of any Claim, Contractor shall promptly make available to Owner all records relating to the Work.

PART 7 - TERMINATION OF THE WORK

7.1 TERMINATION BY OWNER FOR CAUSE

A. Owner may, upon a written Notice to Contractor and to its surety, terminate (without prejudice to any right or remedy of Owner) the Work, or any part of it, for cause upon the occurrence of any one or more of the following events:

1. Contractor fails to prosecute the Work or any portion thereof with sufficient diligence to ensure Completion of the Work within the Contract Time;
2. Contractor is adjudged bankrupt, makes a general assignment for the benefit of its creditors, or a receiver is appointed on account of its insolvency;
3. Contractor fails in a material way to replace or correct Work not in conformance with the Contract Documents;
4. Contractor repeatedly fails to supply skilled workers or proper materials or equipment;
5. Contractor repeatedly fails to make prompt payment due to Subcontractors, suppliers, or for labor;
6. Contractor materially disregards or fails to comply with laws, ordinances, rules, regulations, or orders of any public authority having jurisdiction; or
7. Contractor is otherwise in material breach of any provision of the Contract Documents.

B. Upon termination, Owner may at its option:

1. Take possession of the Project site and take possession of or use all materials, equipment, tools, and construction equipment and machinery thereon owned by Contractor to maintain the orderly progress of, and to finish, the Work;
2. Finish the Work by whatever other reasonable method it deems expedient.

C. Owner's rights and duties upon termination are subject to the prior rights and duties of the surety, if any, obligated under any bond provided in accordance with the Contract Documents.

D. When Owner terminates the Work in accordance with this section, Contractor shall take the actions set forth in paragraph 7.2B, and shall not be entitled to receive further payment until the Work is accepted.

E. If the unpaid balance of the Contract Sum exceeds the cost of finishing the Work, including compensation for A/E services and expenses made necessary thereby and any other extra costs or damages incurred by Owner in completing the Work, or as a result of Contractor's actions, such excess shall be paid to Contractor. If such costs exceed the unpaid balance, Contractor shall pay the difference to Owner. Contractor shall also be liable for liquidated damages until such reasonable time as may be required for Completion. These obligations for payment shall survive termination.

F. Termination of the Work in accordance with this section shall not relieve Contractor or its surety of any responsibilities for Work performed.

G. If Owner terminates Contractor for cause, and it is later determined that none of the circumstances set forth in 7.1A exist, then such termination shall be deemed a termination for convenience pursuant to 7.2.

7.2 TERMINATION BY OWNER FOR CONVENIENCE

A. Owner may, upon Notice, terminate (without prejudice to any right or remedy of Owner) the Work, or any part of it, for the convenience of Owner.

B. Unless Owner directs otherwise, after receipt of a Notice of termination for either cause or convenience, Contractor shall promptly:

1. Stop performing Work on the date and as specified in the notice of termination;
2. Place no further orders or subcontracts for materials, equipment, services or facilities, except as may be necessary for completion of such portion of the Work as is not terminated;
3. Cancel all orders and subcontracts, upon terms acceptable to Owner, to the extent that they relate to the performance of Work terminated;

PART 8 - MISCELLANEOUS PROVISIONS

8.1 RECORDS KEEPING AND REPORTING

A. The Contractor and all Subcontractors shall maintain accounts and records in accordance with State Auditor's procedures, including personnel, property, financial and programmatic records which sufficiently and properly reflect all direct and indirect costs of any nature expended and services performed in the performance of this Contract and other such records as may be deemed necessary by the Owner to ensure proper accounting for all funds contributed by the Owner to the performance of this Contract and compliance with this Contract.

B. The Contractor, and its Subcontractors, shall maintain these records for a period of six (6) years after the date of Final Acceptance.

8.2 AUDITS AND INSPECTIONS

A. The records and documents with respect to all matters covered by this Contract shall be subject at all times to inspection, review or audit by the Owner or any other government agency so authorized by law during the performance of this Contract. The Owner shall have the right to an annual audit of the Contractor's financial statement and condition.

8.3 ORGANIZATION CONFLICTS OF INTEREST

A. The Contractor warrants that to the best of its knowledge and belief and except as otherwise disclosed, it does not have any organizational conflict of interest which is defined as a situation in which the nature of work under this Contract and the Contractor's organizational, financial, contractual or other interests are such that:

1. Award of the Contract may result in an unfair competitive advantage; or
2. The Contractor's objectivity in performing the Contract work may be impaired.

B. The Contractor agrees that if after award they discover an organizational conflict of interest with respect to this Contract, they shall make an immediate and full disclosure in writing to the Contracting Officer, which shall include a description of the action, which the Contractor has taken or intends to take to eliminate or neutralize the conflict. The Owner may, however, terminate the Contract if it deems the action to be in the best interest of the Owner.

C. In the event the Contractor was aware of an organizational conflict of interest before the award of this Contract and intentionally did not disclose the conflict to the Contracting Officer, the Owner may terminate the Contract for default.

D. The provisions of this Clause shall be included in all subcontracts and consulting agreements wherein the work to be performed is similar to the services provided by the Contractor. The Contractor shall include in such subcontracts and consulting agreements any necessary provisions to eliminate or neutralize conflicts of interest.

8.4 INTERESTS OF MEMBERS OF CONGRESS

A. No member of or delegate to the Congress of the United States of America shall be admitted to any share or part of this Contract or to any benefit to arise therefrom, but this provision shall not be construed to extend to this Contract if made with a corporation for its general benefit.

8.5 INTERESTS OF MEMBERS, OFFICERS, COMMISSIONERS AND EMPLOYEES, OR FORMER MEMBERS, OFFICERS AND EMPLOYEES

A. No member, officer, or employee of the King County Housing Authority, no member of the governing body of the locality in which the project is situated, no member of the governing body in which the Owner was activated, and no other public official or such locality or localities who exercises any functions or responsibilities with respect to the project, shall, during his or her tenure, or for one year thereafter, have any interest, direct or indirect, in this Contract or the proceeds thereof.

BID FORM

PROJECT NAME AND LOCATION:

Deck Replacement **Carrington Apartments**	**Contract Number: DW2402831**

BID FORM

The undersigned, Legal Name of Bidder: _____

on this date: _____, 2025, having familiarized him/herself with the contract documents, site conditions, and has field verified all measurements contained in the project manual as prepared by the Owner, hereby proposes to furnish labor, materials and necessary equipment – all including, but not limited to, demolition, disposal, new installation and the required applicable taxes and fees to complete the work for the following bid amounts:

BASE BID _____ (**$**_____)
(Including sales tax indicated in Instructions to Bidders)

ADDENDA _____
Acknowledge receipt of any addenda by inserting the number(s) above

In submitting this bid, it is understood that the right is reserved by the Owner to reject any and all bids. The undersigned hereby agrees that this proposal shall be a valid and firm offer for a period of Sixty (60) calendar days from the date of Bid Opening.

Bidder agrees that Work will be substantially complete and ready for final payment in accordance with the Contract Documents on or before the date, within the number of calendar days indicated.

The undersigned Bidder hereby certifies that, within the three-year period immediately preceding the bid solicitation date for this Project, the bidder is not a "willful" violator, as defined in RCW 49.48.082, of any provision of chapters 49.46, 49.48, or 49.52 RCW, as determined by a final and binding citation and notice of assessment issued by the Department of Labor and Industries or through a civil judgment entered by a court of limited or general jurisdiction.

I certify (or declare) under penalty of perjury under the laws of the State of Washington that the foregoing is true and correct.

_____ _____
Signature of Bidder Print Your Name

Submitted on _____ day of _____ 2025

_____ _____
City State

BIDDER INFORMATION

BIDDER INFORMATION

Name of Bidder (Company): _____

Address: _____

Contact Name: _____

Phone Number: _____ Email Address: _____

Business Type: General Contractor ☐ Other ☐ (Please specify): _____

Bidder is a(n): ☐Individual ☐ Partnership ☐ Joint Venture ☐Incorporated in the state of_____

List business names & associated UBI # used by Bidder during the past 5 years if different than above:

_____

Bidder has been in business continuously from: _____
Month, Year

Business License #: _____ Federal ID #: _____

Current UBI #: _____ Dept. of L&I Worker's Comp. Acct. #: _____

Bidder has experience in work "Similar in Scope and Complexity" comparable to that required for this Project:

As a prime contractor for _____ years. As a subcontractor for _____ years.

OWNER(S) OF COMPANY (List **all** owners):	OWNER'S SOCIAL SECURITY NUMBER (only required if sole proprietorship):

No. of regular full-time employees other than owner(s): _____

Indicate clearly the kind of work your company will actually perform in this project:

_____

Approximate % of work your company will actually perform: _____

List the supervisory personnel to be employed by the Bidder and available for, and intended to, work on this project:

Name	Title	How Long With Bidder
_____	_____	_____
_____	_____	_____

BIDDER INFORMATION

SUBCONTRACTORS

Do you intend to use Subcontractor(s) in this project? Yes ☐ No ☐ (If yes, you must show the name of the subcontractors. Attach additional pages as necessary.)

Subcontractors Name	Subcontractor's UBI#	Phone Number	Trade	Years in Business
1.				
2.				
3.				
4.				
5.				

BIDDER'S EXPERIENCE

Projects successfully supervised and completed by your company for work of similar scope and value as specified in bid documents in the last 5 years. Attach additional pages as necessary.

Name of Project	Completion Date	Duration (Months)	Nature of Work	Amount of Contract
1.				
2.				
3.				
4.				
5.				

Owner's Name (of project listed above)	Project Address	Contact Person	Phone Number
1.			
2.			
3.			
4.			
5.			

Has Bidder ever been found guilty of violating any State or Federal employment laws? ☐ No ☐ Yes
If yes, give details & attach additional pages as necessary:

Has Bidder ever filed for protection under any provision of the federal bankruptcy laws or state insolvency laws?
☐ No ☐ Yes If yes, give details & attach additional pages as necessary:

BIDDER INFORMATION

Has any lien, claim and/or adverse legal action related to construction been rendered against Bidder in the past five years? (i.e., open claims, lawsuits, warrants, judgements including but not limited to those that would show on the L&I website) ☐ No ☐ Yes If yes, give details & attach additional pages as necessary:

Has Bidder or any of its employees filed any claims with Washington State Worker's Compensation or other insurance company for accidents resulting in fatal injury or dismemberment in the past 5 years? ☐ No ☐ Yes
If yes, please state:

Date	Type of Injury	Agency Receiving Claim
_____	_____	_____
_____	_____	_____

Bidders current Experience Modification Rate (EMR): _____

(If Bidder is self-insured, attach proof of EMR stated, showing complete worksheet calculations)

The bidder hereby certifies that the information contained in this Bidder's Information is accurate, complete and current.

BY: _____ NAME: _____
(signature) (print)

TITLE:_____ DATE: _____

CONTRACT FORM

This Contract is entered into by and between the King County Housing Authority, hereinafter referred to as the "Owner" whose principal office is located at 600 Andover Park West, Tukwila, WA 98188 and [Name of Contractor], referred to as the "Contractor", whose principal office is located at [Contractor's Address].

IN CONSIDERATION OF the mutual benefits and conditions hereinafter contained, the parties hereto agree as follows:

1.1 Contract Documents

A. The provisions set forth in the Contract Documents are hereby incorporated into and made part of the Contract. Contractor acknowledges receipt and review of all Contract Documents applicable to performance of the work. The Contract shall consist of the following component parts:

1. This Instrument
2. Addenda
3. Specifications
4. Plans
5. Bid Form
6. Pre-Bid Agenda
7. General Conditions
8. Instructions to Bidders
9. Prevailing Wage Rates
10. Performance and Payment Bonds
11. Hazardous Material Report

1.2 Scope of Services to be Performed by the Contractor: The Contractor shall provide all labor, materials, tools, equipment, transportation, supplies, and incidentals required to complete the work in accordance with the Contract Documents for:

Project: Carrington Apartments Building E Deck Replacement Contract No.: DW2402831

1.3 Compensation: The total amount of the Contract shall be [$$$] dollars and [¢¢] cents ($[$$$.$$]) subject to additions and deductions provided therein.

1.4 Duration of Contract: The Contractor shall commence work after receipt of Notice to Proceed, follow the schedule specified in the contract documents, and all work must be completed within one hundred (100) consecutive calendar days from the date of the Notice to Proceed unless sooner terminated pursuant to the General Conditions. Upon expiration of the original Contract term, the Contract, at the Owner's sole discretion, may be extended for a period determined by the Owner.

1.5 Liquidated Damages: Timely performance and completion of the Work is essential to Owner and time limits stated in the Contract Documents are of the essence. If Completion of the Work does not occur within the Contract Time, the Contractor agrees that Liquidated Damages in the amount of **$250.00** per day will be assessed for each calendar day that the Contractor exceeds the time for completion.

The individuals signing this Contract warrant and represent for themselves and for their respective organizations that they are duly authorized to sign this Contract and that upon such signing their respective organizations are bound thereby.

DATED this _____ day of _____, 2025

Contractor	Owner
_____	_____
President/Owner	Robin Walls President/CEO KING COUNTY HOUSING AUTHORITY

SAMPLE

CERTIFICATE OF INSURANCE

DATE(MM/DD/YY)
Issue Date

PRODUCER
Vendor's Insurance Agent
Street Address
City, State, Zip
Phone Number

THIS CERTIFICATE IS ISSUED AS A MATTER OF INFORMATION ONLY AND CONFERS NO RIGHTS UPON THE CERTIFICATE HOLDER. THIS CERTIFICATE DOES NOT AMEND, EXTEND OR ALTER THE COVERAGE AFFORDED BY THE POLICIES BELOW.

COMPANIES AFFORDING COVERAGE

COMPANY A	**ABC Insurance Company**
COMPANY B	**DEF Insurance Company**
COMPANY C	**GHI Insurance Company**
COMPANY D	

INSURED

Vendor Name
Street Address
City, State, Zip

COVERAGES

THIS IS TO CERTIFY THAT THE POLICIES OF INSURANCE LISTED BELOW HAVE BEEN ISSUED TO THE INSURED NAMED ABOVE FOR THE POLICY PERIOD INDICATED. NOTWITHSTANDING ANY REQUIREMENT, TERM OR CONDITION OF ANY CONTRACT OR OTHER DOCUMENT WITH REPSECT TO WHICH THIS CERTIFICATE MAY BE ISSUED OR MAY PERTAIN, THE INSURANCE AFFORDED BY THE POICIES DESCRIBED HEREIN IS SUBJECT TO ALL THE TERMS, EXCLUSIONS AND CONDITIONS OF SUCH POLICIES. LIMITS SHOWN MAY HAVE BEEN REDUCED BY PAID CLAIMS.

CO LTR	TYPE OF INSURANCE	POLICY NUMBER	POLICY EFFECTIVE DATE (MM/DD/YY)	POLICY EXPIRATION DATE (MM/DD/YY)	LIMITS	
A	**GENERAL LIABILITY**	**XXX123**	**01/01/00**	**01/01/01**	GENERAL AGGREGATE	**2,000,000**
	X COMMERCIAL GENERAL LIABILITY				PRODUCTS-COMP/OP AGG	**1,000,000**
	CLAIMS MADE X OCCUR				PERSONAL & ADV INJURY	**1,000,000**
	OWNER'S & CONTRACTOR'S PROT				EACH OCCURRENCE	**1,000,000**
					FIRE DAMAGE (Any one fire)	**50,000**
					MED EXP (Any one person)	**5,000**
B	**AUTOMOBILE LIABILITY**	**XXX456**	**01/01/00**	**01/01/01**	COMBINED SINGLE LIMIT	**1,000,000**
	X ANY AUTO				BODILY INJURY (Per person)	
	ALL OWNED AUTOS					
	SCHEDULED AUTOS				BODILY INJURY (Per accident)	
	X HIRED AUTOS					
	NON-OWNED AUTOS				PROPERTY DAMAGE	
	GARAGE LIABILITY				AUTO ONLY-EA ACCIDENT	
	ANY AUTO				OTHER THAN AUTO ONLY:	
					EACH ACCIDENT	
					AGGREGATE	
	EXCESS LIABILITY				EACH OCCURRENCE	
	UMBRELLA FORM				AGGREGATE	
	OTHER THAN UMBRELLA FORM					
C	**WORKERS' COMPENSATION AND EMPLOYER'S LIABILITY**	**XXX789**	**01/01/00**	**01/01/01**	X STATUTORY LIMITS	
	THE PROPRIETOR/ PARTNERS/EXECUTIVE OFFICERS ARE: INCL / EXCL				EACH ACCIDENT	**1,000,000**
					DISEASE-POLICY LIMIT	**1,000,000**
					DISEASE-EACH EMPLOYEE	**1,000,000**
	OTHER					

DESCRIPTION OF OPERATIONS/LOCATIONS/VEHICLES/SPECIAL ITEMS

Allied Residential and King County Housing Authority are named as additional insureds with respect to above general liability and auto coverages. Contract #DW2402831
Re: Insured's work/services provided at Carrington Apartments, 2501 148th Ave SE, Bellevue, WA 98007

CERTIFICATE HOLDER

Allied Residential
and King County Housing Authority
600 Andover Park West
Seattle, WA 98188-3326

CANCELLATION

SHOULD ANY OF THE ABOVE DESCRIBED POLICIES BE CANCELED BEFORE THE EXPIRATION DATE THEREOF, THE ISSUING COMPANY WILL ENDEAVOR TO MAIL **30** DAYS WRITTEN NOTICE TO THE CERTIFICATE HOLDER NAMED TO THE LEFT, BUT FAILURE TO MAIL SUCH NOTICE SHALL IMPOSE NO OBLIGATION OR LIABILITY OF ANY KIND UPON THE COMPANY, ITS AGENTS OR REPRESENTATIVES.

AUTHORIZED REPRESENTATIVE

Signature of Insured's Agent

ACORD CORPORATION 1993

SAMPLE

PROVIDE

GENERAL LIABILITY ENDORSEMENT

and

AUTO LIABILITY ENDORSEMENT

SAMPLE

Lead-Based Paint Inspection Report

Carrington Apartments
2501 148th Avenue Southeast
Bellevue, Washington 98007

Prepared for:
King County Housing Authority
600 Andover Park West
Seattle, Washington 98188

December 9, 2022
PBS Project 40573.234

214 E GALER STREET, SUITE 300
SEATTLE, WA 98102
206.233.9639 MAIN
866.727.0140 FAX
PBSUSA.COM

LEAD-BASED PAINT INSPECTION REPORT

Carrington Apartments
2501 148th Avenue Southeast
Bellevue, Washington 98007

Prepared for:
King County Housing Authority
600 Andover Park West
Seattle, Washington 98188

Prepared by:
PBS Engineering and Environmental
214 E Galer Street, Suite 300
Seattle, WA 98102
(206) 233-9639

PBS Project 40573.234
December 9, 2022

This report is for the exclusive use of the client for planned development of the property and is not to be relied upon by other parties. It is not to be photographed, photocopied, or similarly reproduced in total or in part without the expressed written consent of the client and PBS.

TABLE OF CONTENTS

1 IDENTIFYING INFORMATION 1

2 LEAD-BASED PAINT INSPECTION 3

2.1 Site Information 3

2.2 Lead-Based Paint Inspection and Sampling 3

2.2.1 XRF Sampling 3

2.2.2 Bulk Paint-Chip Sampling 3

Supporting Data

APPENDICES

Tab 1: XRF Data Sheets
Calibration Check Forms
Site Plan

Tab 2: Certifications

©2022 PBS Engineering and Environmental Inc.

1 IDENTIFYING INFORMATION

BUILDING DATA
Carrington Apartments
Building A-I, Office/Clubhouse, Gym
Buildings F, G, and I.
2501 148th Avenue Southeast
Bellevue, Washington 98007

CLIENT DATA
King County Housing Authority (KCHA)
600 Andover Park West
Seattle, WA 98188

SCOPE OF ASSESSMENT
KCHA has requested that PBS perform lead-based paint inspections of the buildings at Carrington Apartments. Kaitlin Soukup of PBS Engineering and Environmental, Inc. (PBS) conducted a lead-based paint inspection of the exterior of Buildings A through I and the Office/Clubhouse on March 25, 2022, and the interior on June 16, 20, 23, and July 5, 2022, in accordance with Chapter 7: Lead-Based Paint Inspection of the U.S. Department of Housing and Urban Development (HUD), Guidelines for the Evaluation and Control of Lead-Based Paint Hazards in Housing (HUD Guidelines). The exterior soffit, stair stringers and fascia on Buildings F, G, I and the interior of Unit 113 was inspected by Janet Murphy on October 21, 2022.

CERTIFICATIONS

Lead Inspector/Risk Assessor
Kaitlin Soukup
State of Washington Risk Assessor Certification No: 7192
Expiration Date: 04/09/2024

Kaitlin Soukup

Signature — Date: 7/13/2022

Lead Inspector/Risk Assessor
Janet Murphy
State of Washington Risk Assessor Certification No: 0258
Expiration Date: 03/08/2025

Janet Murphy

Signature — Date: 10/28/2022

Firm

PBS Engineering and Environmental
214 E Galer Street, Suite 300
Seattle, Washington 98102
Telephone: 206.223.9639

Certification No: 178
Expiration Date : 09/03/2025

2 LEAD-BASED PAINT INSPECTION

2.1 Site Information

Carrington Apartments consists of 9 buildings with a total of 108 units, an office/clubhouse building, and a gym and bike storage. The buildings are of wood construction with gypsum interior walls and ceilings. The exterior building components consist of cement board siding, wood siding, and wood trim. Apartments are one or two bedrooms with a bathroom, kitchen/dining area, and living room. The buildings are in good condition. Windows are vinyl.

2.2 Lead-Based Paint Inspection and Sampling

Based on a review of King County Assessor records, Carrington Apartments was constructed in 1969. A total of 108 units are present throughout the complex. Based on unit selection criteria in Table 7.3 of Chapter 7 of the HUD Guidelines, PBS inspected 24 units.

2.2.1 XRF Sampling

The presence of lead in paint was determined through x-ray fluorescence spectroscopy. A handheld Niton Inc. X-Ray Fluorescence (XRF) Analyzer, Model XLP 300A Version 5.2.1 P/N 500-926 Serial #102877 operating in lead paint mode was used to perform a surface-by-surface lead paint inspection of each painted surface in the selected units and other building areas. Calibration was checked based on the requirements of the Performance Characteristic Sheet for the XRF Analyzer. All calibration readings were within the tolerance for this instrument. No substrate correction is required with this instrument.

HUD and the U.S. Environmental Protection Agency (EPA) have set 1.0 milligrams per square centimeter (mg/cm^2) as the threshold limit for lead-based paint as determined through X-Ray Fluorescence (XRF) testing. HUD and EPA have set 5,000 parts per million (ppm) or 0.5% by atomic absorption spectroscopy (AAS) laboratory analysis as the threshold limit for lead-based paint. Paint that is known to contain lead levels less than those described above does not have to be evaluated, although all deteriorated paint (paint surfaces in poor condition) should be repaired because it may contain lower levels of lead that may contribute to lead dust or lead contaminated soil hazards.

The "Side" information presented on the XRF data sheets is in relation to the side of the rooms or building exteriors where the unit number is located. The inspector/risk assessor used the address side of each residence as the basis to establish side "A." Sides B, C, and D follow in clockwise rotation.

Please refer to the XRF Sample Data Table located in Tab 1 for a complete list of XRF samples.

2.2.2 Bulk Paint-Chip Sampling

Bulk paint chip verification samples are collected when there is an inconclusive result with the XRF. There were no inconclusive results with the XRF analyzer. No bulk paint chip samples were collected.

2.2.3 Components with Lead-Based Paint

Lead was **not** found in any of the paint on interior and exterior building components associated with Buildings A through I, office/clubhouse building, and gym and bike storage at Carrington Apartments above the HUD lead-based paint threshold of 1.0 mg/cm^2 by XRF.

TAB 1

XRF Data Sheets
Calibration Check Forms
Site Plan

Lead-Based Paint Inspection XRF Data
Inspection Date: 03/25/2022

Reading No	Time	Component	Substrate	Side	Condition	Color	Building	Results	Pb
1	3/25/2022 8:29								8.76
2	3/25/2022 8:30	nist				RED		Null	1
3	3/25/2022 8:30	nist				RED		Null	1.2
4	3/25/2022 8:30	nist				RED		Negative	0.9
5	3/25/2022 8:31	nist				RED		Positive	1
6	3/25/2022 8:32	nist				RED		Negative	0.9
7	3/25/2022 8:42	SIDING	WOOD	A	INTACT	YELLOW	BLDG G	Negative	< LOD
8	3/25/2022 8:42	TRIM	WOOD	A	INTACT	YELLOW	BLDG G	Negative	< LOD
9	3/25/2022 8:43	SIDING	WOOD	A	INTACT	BROWN	BLDG G	Negative	< LOD
10	3/25/2022 8:43	RAILING	WOOD	A	INTACT	BROWN	BLDG G	Negative	< LOD
11	3/25/2022 8:56	RAILING	WOOD	A	INTACT	BROWN	BLDG G	Negative	< LOD
12	3/25/2022 8:57	SIDING	WOOD	A	INTACT	GREEN	BLDG G	Negative	< LOD
13	3/25/2022 8:57	COLUMN	METAL	A	INTACT	YELLOW	BLDG G	Negative	< LOD
14	3/25/2022 8:58	SIDING	WOOD	B	INTACT	GREEN	BLDG G	Negative	< LOD
15	3/25/2022 8:58	SIDING	WOOD	B	INTACT	YELLOW	BLDG G	Negative	< LOD
16	3/25/2022 8:58	TRIM	WOOD	B	INTACT	YELLOW	BLDG G	Negative	< LOD
17	3/25/2022 8:59	SIDING	WOOD	C	INTACT	YELLOW	BLDG G	Negative	< LOD
18	3/25/2022 8:59	SIDING	WOOD	C	INTACT	GREEN	BLDG G	Negative	< LOD
19	3/25/2022 8:59	TRIM	WOOD	C	INTACT	YELLOW	BLDG G	Negative	< LOD
20	3/25/2022 9:00	COLUMN	METAL	C	INTACT	YELLOW	BLDG G	Negative	< LOD
21	3/25/2022 9:00	SIDING	WOOD	D	INTACT	YELLOW	BLDG G	Negative	< LOD
22	3/25/2022 9:01	SIDING	WOOD	D	INTACT	GREEN	BLDG G	Negative	< LOD
23	3/25/2022 9:01	TRIM	WOOD	D	INTACT	YELLOW	BLDG G	Negative	< LOD
24	3/25/2022 9:02	SIDING	WOOD	A	INTACT	YELLOW	BLDG H	Negative	< LOD
25	3/25/2022 9:02	SIDING	WOOD	A	INTACT	BROWN	BLDG H	Negative	< LOD
26	3/25/2022 9:02	SIDING	WOOD	A	INTACT	GREEN	BLDG H	Negative	< LOD
27	3/25/2022 9:03	TRIM	WOOD	A	INTACT	YELLOW	BLDG H	Negative	< LOD
28	3/25/2022 9:03	STAIRS	WOOD	A	INTACT	BROWN	BLDG H	Negative	< LOD
29	3/25/2022 9:04	DOOR	WOOD	A	INTACT	BROWN	BLDG H	Negative	< LOD
30	3/25/2022 9:04	SIDING	WOOD	D	INTACT	YELLOW	BLDG H	Negative	< LOD
31	3/25/2022 9:05	SIDING	WOOD	D	INTACT	GREEN	BLDG H	Negative	< LOD
32	3/25/2022 9:05	TRIM	WOOD	D	INTACT	YELLOW	BLDG H	Negative	< LOD
33	3/25/2022 9:05	SIDING	WOOD	C	INTACT	YELLOW	BLDG H	Negative	< LOD
34	3/25/2022 9:06	SIDING	WOOD	C	INTACT	GREEN	BLDG H	Negative	< LOD

Reading No	Time	Component	Substrate	Side	Condition	Color	Building	Results	Pb
35	3/25/2022 9:06	TRIM	WOOD	C	INTACT	YELLOW	BLDG H	Negative	< LOD
36	3/25/2022 9:06	COLUMN	METAL	C	INTACT	YELLOW	BLDG H	Negative	< LOD
37	3/25/2022 9:07	SIDING	WOOD	B	INTACT	YELLOW	BLDG H	Negative	< LOD
38	3/25/2022 9:07	SIDING	WOOD	B	INTACT	GREEN	BLDG H	Negative	< LOD
39	3/25/2022 9:08	TRIM	WOOD	B	INTACT	YELLOW	BLDG H	Negative	< LOD
40	3/25/2022 9:08	SIDING	WOOD	A	INTACT	YELLOW	BLDG I	Negative	< LOD
41	3/25/2022 9:08	SIDING	WOOD	A	INTACT	BROWN	BLDG I	Negative	< LOD
42	3/25/2022 9:09	SIDING	WOOD	A	INTACT	GREEN	BLDG I	Negative	< LOD
43	3/25/2022 9:09	TRIM	WOOD	A	INTACT	YELLOW	BLDG I	Negative	< LOD
44	3/25/2022 9:09	COLUMN	METAL	A	INTACT	YELLOW	BLDG I	Negative	< LOD
45	3/25/2022 9:10	STAIR RAIL	WOOD	A	INTACT	BROWN	BLDG I	Negative	< LOD
46	3/25/2022 9:10	DOOR	WOOD	A	INTACT	BROWN	BLDG I	Negative	< LOD
47	3/25/2022 9:11	SIDING	WOOD	B	INTACT	BROWN	BLDG I	Negative	< LOD
48	3/25/2022 9:11	SIDING	WOOD	B	INTACT	YELLOW	BLDG I	Negative	< LOD
49	3/25/2022 9:11	SIDING	WOOD	B	INTACT	GREEN	BLDG I	Negative	< LOD
50	3/25/2022 9:11	TRIM	WOOD	B	INTACT	YELLOW	BLDG I	Negative	< LOD
51	3/25/2022 9:12	SIDING	WOOD	C	INTACT	YELLOW	BLDG I	Negative	< LOD
52	3/25/2022 9:13	SIDING	WOOD	C	INTACT	GREEN	BLDG I	Negative	< LOD
53	3/25/2022 9:14	COLUMN	METAL	C	INTACT	YELLOW	BLDG I	Negative	< LOD
54	3/25/2022 9:14	TRIM	WOOD	C	INTACT	YELLOW	BLDG I	Negative	< LOD
55	3/25/2022 9:14	SIDING	WOOD	D	INTACT	YELLOW	BLDG I	Negative	< LOD
56	3/25/2022 9:14	SIDING	WOOD	D	INTACT	GREEN	BLDG I	Negative	< LOD
57	3/25/2022 9:15	TRIM	WOOD	D	INTACT	YELLOW	BLDG I	Negative	< LOD
58	3/25/2022 9:16	SIDING	WOOD	A	INTACT	YELLOW	LEASING OFFICE	Negative	< LOD
59	3/25/2022 9:16	TRIM	WOOD	A	INTACT	YELLOW	LEASING OFFICE	Negative	< LOD
60	3/25/2022 9:17	TRIM	WOOD	A	INTACT	GREEN	LEASING OFFICE	Negative	< LOD
61	3/25/2022 9:17	DOOR	METAL	A	INTACT	BROWN	LEASING OFFICE	Negative	< LOD
62	3/25/2022 9:18	SIDING	WOOD	D	INTACT	YELLOW	LEASING OFFICE	Negative	< LOD
63	3/25/2022 9:18	SIDING	WOOD	D	INTACT	GREEN	LEASING OFFICE	Negative	< LOD
64	3/25/2022 9:18	TRIM	WOOD	D	INTACT	YELLOW	LEASING OFFICE	Negative	< LOD
65	3/25/2022 9:19	DOOR	METAL	D	INTACT	BROWN	LEASING OFFICE	Negative	< LOD
66	3/25/2022 9:19	SIDING	WOOD	C	INTACT	YELLOW	LEASING OFFICE	Negative	< LOD
67	3/25/2022 9:20	SIDING	WOOD	C	INTACT	GREEN	LEASING OFFICE	Negative	< LOD
68	3/25/2022 9:20	TRIM	WOOD	C	INTACT	YELLOW	LEASING OFFICE	Negative	< LOD

Reading No	Time	Component	Substrate	Side	Condition	Color	Building	Results	Pb
69	3/25/2022 9:20	COLUMN	WOOD	C	INTACT	YELLOW	LEASING OFFICE	Negative	< LOD
70	3/25/2022 9:23	SIDING	WOOD	B	INTACT	YELLOW	LEASING OFFICE	Negative	< LOD
71	3/25/2022 9:23	TRIM	WOOD	B	INTACT	YELLOW	LEASING OFFICE	Negative	< LOD
72	3/25/2022 9:24	DOOR	METAL	B	INTACT	BROWN	LEASING OFFICE	Negative	< LOD
73	3/25/2022 9:24	SIDING	WOOD	B	INTACT	GREEN	LEASING OFFICE	Negative	< LOD
74	3/25/2022 9:26	SIDING	WOOD	A	INTACT	YELLOW	BLDG A	Negative	< LOD
75	3/25/2022 9:26	SIDING	WOOD	A	INTACT	BROWN	BLDG A	Negative	< LOD
76	3/25/2022 9:26	SIDING	WOOD	A	INTACT	GREEN	BLDG A	Negative	< LOD
77	3/25/2022 9:27	STAIR RAIL	WOOD	A	INTACT	BROWN	BLDG A	Negative	< LOD
78	3/25/2022 9:27	DOOR	WOOD	A	INTACT	BROWN	BLDG A	Negative	< LOD
79	3/25/2022 9:27	TRIM	WOOD	A	INTACT	GREEN	BLDG A	Negative	< LOD
80	3/25/2022 9:27	TRIM	WOOD	A	INTACT	YELLOW	BLDG A	Negative	< LOD
81	3/25/2022 9:28	COLUMN	METAL	A	INTACT	YELLOW	BLDG A	Negative	< LOD
82	3/25/2022 9:29	SIDING	WOOD	B	INTACT	YELLOW	BLDG A	Negative	< LOD
83	3/25/2022 9:29	SIDING	WOOD	B	INTACT	GREEN	BLDG A	Negative	< LOD
84	3/25/2022 9:29	TRIM	WOOD	B	INTACT	YELLOW	BLDG A	Negative	< LOD
85	3/25/2022 9:30	SIDING	WOOD	C	INTACT	YELLOW	BLDG A	Negative	< LOD
86	3/25/2022 9:30	SIDING	WOOD	C	INTACT	GREEN	BLDG A	Negative	< LOD
87	3/25/2022 9:30	TRIM	WOOD	C	INTACT	YELLOW	BLDG A	Negative	< LOD
88	3/25/2022 9:30	COLUMN	METAL	C	INTACT	YELLOW	BLDG A	Negative	< LOD
89	3/25/2022 9:32	SIDING	WOOD	D	INTACT	YELLOW	BLDG A	Negative	< LOD
90	3/25/2022 9:32	WALL	CONCRETE	D	INTACT	YELLOW	BLDG A	Negative	< LOD
91	3/25/2022 9:33	SIDING	WOOD	D	INTACT	BROWN	BLDG A	Negative	< LOD
92	3/25/2022 9:33	SIDING	WOOD	D	INTACT	GREEN	BLDG A	Negative	< LOD
93	3/25/2022 9:34	COLUMN	METAL	A	INTACT	YELLOW	CARPORT 1234	Negative	< LOD
94	3/25/2022 9:36	SIDING	WOOD	A	INTACT	YELLOW	BLDG B	Negative	< LOD
95	3/25/2022 9:36	SIDING	WOOD	A	INTACT	GREEN	BLDG B	Negative	< LOD
96	3/25/2022 9:36	STAIR RAIL	WOOD	A	INTACT	BROWN	BLDG B	Negative	< LOD
97	3/25/2022 9:37	TRIM	WOOD	A	INTACT	YELLOW	BLDG B	Negative	< LOD
98	3/25/2022 9:37	DOOR	WOOD	A	INTACT	BROWN	BLDG B	Negative	< LOD
99	3/25/2022 9:37	TRIM	WOOD	A	INTACT	GREEN	BLDG B	Negative	< LOD
100	3/25/2022 9:38	SIDING	WOOD	B	INTACT	YELLOW	BLDG B	Negative	< LOD
101	3/25/2022 9:38	SIDING	WOOD	B	INTACT	GREEN	BLDG B	Negative	< LOD
102	3/25/2022 9:38	TRIM	WOOD	B	INTACT	YELLOW	BLDG B	Negative	< LOD

Reading No	Time	Component	Substrate	Side	Condition	Color	Building	Results	Pb
103	3/25/2022 9:39	SIDING	WOOD	C	INTACT	YELLOW	BLDG B	Negative	< LOD
104	3/25/2022 9:40	SIDING	WOOD	C	INTACT	GREEN	BLDG B	Negative	< LOD
105	3/25/2022 9:40	TRIM	WOOD	C	INTACT	YELLOW	BLDG B	Negative	< LOD
106	3/25/2022 9:40	COLUMN	METAL	C	INTACT	YELLOW	BLDG B	Negative	< LOD
107	3/25/2022 9:41	SIDING	WOOD	D	INTACT	YELLOW	BLDG B	Negative	< LOD
108	3/25/2022 9:41	SIDING	WOOD	D	INTACT	GREEN	BLDG B	Negative	< LOD
109	3/25/2022 9:41	TRIM	WOOD	D	INTACT	YELLOW	BLDG B	Negative	< LOD
110	3/25/2022 9:42	SIDING	WOOD	A	INTACT	YELLOW	BLDG C	Negative	< LOD
111	3/25/2022 9:43	SIDING	WOOD	A	INTACT	GREEN	BLDG C	Negative	< LOD
112	3/25/2022 9:43	STAIR RAIL	WOOD	A	INTACT	BROWN	BLDG C	Negative	< LOD
113	3/25/2022 9:43	DOOR	WOOD	A	INTACT	BROWN	BLDG C	Negative	< LOD
114	3/25/2022 9:44	TRIM	WOOD	A	INTACT	GREEN	BLDG C	Negative	< LOD
115	3/25/2022 9:44	TRIM	WOOD	A	INTACT	YELLOW	BLDG C	Negative	< LOD
116	3/25/2022 9:44	TRIM	WOOD	A	INTACT	YELLOW	BLDG C	Negative	< LOD
117	3/25/2022 9:45	SIDING	WOOD	B	INTACT	YELLOW	BLDG C	Negative	< LOD
118	3/25/2022 9:45	SIDING	WOOD	B	INTACT	GREEN	BLDG C	Negative	< LOD
119	3/25/2022 9:45	TRIM	WOOD	B	INTACT	YELLOW	BLDG C	Negative	< LOD
120	3/25/2022 9:46	SIDING	WOOD	C	INTACT	YELLOW	BLDG C	Negative	< LOD
121	3/25/2022 9:46	SIDING	WOOD	C	INTACT	GREEN	BLDG C	Negative	< LOD
122	3/25/2022 9:47	TRIM	WOOD	C	INTACT	YELLOW	BLDG C	Negative	< LOD
123	3/25/2022 9:48	COLUMN	METAL	C	INTACT	YELLOW	BLDG C	Negative	< LOD
124	3/25/2022 9:48	SIDING	WOOD	D	INTACT	YELLOW	BLDG C	Negative	< LOD
125	3/25/2022 9:49	SIDING	WOOD	D	INTACT	GREEN	BLDG C	Negative	< LOD
126	3/25/2022 9:49	TRIM	WOOD	D	INTACT	YELLOW	BLDG C	Negative	< LOD
127	3/25/2022 9:50	COLUMN	METAL	A	INTACT	YELLOW	CARPORT 5678	Negative	< LOD
128	3/25/2022 9:52	SIDING	WOOD	A	INTACT	YELLOW	BLDG D	Negative	< LOD
129	3/25/2022 9:52	SIDING	WOOD	A	INTACT	GREEN	BLDG D	Negative	< LOD
130	3/25/2022 9:52	TRIM	WOOD	A	INTACT	YELLOW	BLDG D	Negative	< LOD
131	3/25/2022 9:53	STAIR RAIL	METAL	B	INTACT	BROWN	BLDG D	Negative	< LOD
132	3/25/2022 9:53	SIDING	WOOD	B	INTACT	YELLOW	BLDG D	Negative	< LOD
133	3/25/2022 9:54	SIDING	WOOD	B	INTACT	GREEN	BLDG D	Negative	< LOD
134	3/25/2022 9:54	DOOR	WOOD	B	INTACT	BROWN	BLDG D	Negative	< LOD
135	3/25/2022 9:54	TRIM	WOOD	B	INTACT	YELLOW	BLDG D	Negative	< LOD
136	3/25/2022 9:54	COLUMN	METAL	B	INTACT	YELLOW	BLDG D	Negative	< LOD

Reading No	Time	Component	Substrate	Side	Condition	Color	Building	Results	Pb
137	3/25/2022 9:55	SIDING	WOOD	C	INTACT	YELLOW	BLDG D	Negative	< LOD
138	3/25/2022 9:55	SIDING	WOOD	C	INTACT	GREEN	BLDG D	Negative	< LOD
139	3/25/2022 9:55	TRIM	WOOD	C	INTACT	YELLOW	BLDG D	Negative	< LOD
140	3/25/2022 9:56	SIDING	WOOD	D	INTACT	YELLOW	BLDG D	Negative	< LOD
141	3/25/2022 9:56	SIDING	WOOD	D	INTACT	GREEN	BLDG D	Negative	< LOD
142	3/25/2022 9:57	DOOR	WOOD	D	INTACT	BROWN	BLDG D	Negative	< LOD
143	3/25/2022 9:57	TRIM	WOOD	D	INTACT	YELLOW	BLDG D	Negative	< LOD
144	3/25/2022 9:57	COLUMN	METAL	D	INTACT	YELLOW	BLDG D	Negative	< LOD
145	3/25/2022 9:58	SIDING	WOOD	A	INTACT	YELLOW	BLDG E	Negative	< LOD
146	3/25/2022 9:59	SIDING	WOOD	A	INTACT	GREEN	BLDG E	Negative	< LOD
147	3/25/2022 9:59	STAIR RAIL	WOOD	A	INTACT	BROWN	BLDG E	Negative	< LOD
148	3/25/2022 9:59	DOOR	WOOD	A	INTACT	BROWN	BLDG E	Negative	< LOD
149	3/25/2022 10:00	TRIM	WOOD	A	INTACT	GREEN	BLDG E	Negative	< LOD
150	3/25/2022 10:00	TRIM	WOOD	A	INTACT	YELLOW	BLDG E	Negative	< LOD
151	3/25/2022 10:00	TRIM	WOOD	A	INTACT	YELLOW	BLDG E	Negative	< LOD
152	3/25/2022 10:00	TRIM	WOOD	A	INTACT	YELLOW	BLDG E	Negative	< LOD
153	3/25/2022 10:01	SIDING	WOOD	B	INTACT	YELLOW	BLDG E	Negative	< LOD
154	3/25/2022 10:02	SIDING	WOOD	B	INTACT	GREEN	BLDG E	Negative	< LOD
155	3/25/2022 10:02	TRIM	WOOD	B	INTACT	YELLOW	BLDG E	Negative	< LOD
156	3/25/2022 10:02	SIDING	WOOD	C	INTACT	YELLOW	BLDG E	Negative	< LOD
157	3/25/2022 10:03	SIDING	WOOD	C	INTACT	GREEN	BLDG E	Negative	< LOD
158	3/25/2022 10:04	TRIM	WOOD	C	INTACT	YELLOW	BLDG E	Negative	< LOD
159	3/25/2022 10:04	SIDING	WOOD	D	INTACT	YELLOW	BLDG E	Negative	< LOD
160	3/25/2022 10:04	SIDING	WOOD	D	INTACT	GREEN	BLDG E	Negative	< LOD
161	3/25/2022 10:04	TRIM	WOOD	D	INTACT	YELLOW	BLDG E	Negative	< LOD
162	3/25/2022 10:06	COLUMN	METAL	A	INTACT	YELLOW	CARPORT 9	Negative	< LOD
163	3/25/2022 10:06	SIDING	WOOD	A	INTACT	YELLOW	BLDG F	Negative	< LOD
164	3/25/2022 10:07	SIDING	WOOD	A	INTACT	GREEN	BLDG F	Negative	< LOD
165	3/25/2022 10:07	DOOR	WOOD	A	INTACT	BROWN	BLDG F	Negative	< LOD
166	3/25/2022 10:07	TRIM	WOOD	A	INTACT	GREEN	BLDG F	Negative	< LOD
167	3/25/2022 10:08	STAIR RAIL	WOOD	A	INTACT	BROWN	BLDG F	Negative	< LOD
168	3/25/2022 10:08	TRIM	WOOD	A	INTACT	YELLOW	BLDG F	Negative	< LOD
169	3/25/2022 10:08	TRIM	WOOD	A	INTACT	YELLOW	BLDG F	Null	< LOD
170	3/25/2022 10:09	SIDING	WOOD	B	INTACT	YELLOW	BLDG F	Negative	< LOD

Reading No	Time	Component	Substrate	Side	Condition	Color	Building	Results	Pb
171	3/25/2022 10:09	SIDING	WOOD	B	INTACT	GREEN	BLDG F	Negative	< LOD
172	3/25/2022 10:09	TRIM	WOOD	B	INTACT	YELLOW	BLDG F	Negative	< LOD
173	3/25/2022 10:10	SIDING	WOOD	C	INTACT	YELLOW	BLDG F	Negative	< LOD
174	3/25/2022 10:10	SIDING	WOOD	C	INTACT	GREEN	BLDG F	Negative	< LOD
175	3/25/2022 10:11	COLUMN	METAL	C	INTACT	YELLOW	BLDG F	Negative	< LOD
176	3/25/2022 10:11	TRIM	WOOD	C	INTACT	YELLOW	BLDG F	Negative	< LOD
177	3/25/2022 10:12	SIDING	WOOD	D	INTACT	YELLOW	BLDG F	Negative	< LOD
178	3/25/2022 10:12	SIDING	WOOD	D	INTACT	GREEN	BLDG F	Negative	< LOD
179	3/25/2022 10:12	TRIM	WOOD	D	INTACT	YELLOW	BLDG F	Negative	< LOD
180	3/25/2022 10:14	SIDING	WOOD	A	INTACT	YELLOW	BLDG SE OF F	Negative	< LOD
181	3/25/2022 10:14	SIDING	WOOD	B	INTACT	YELLOW	BLDG SE OF F	Negative	< LOD
182	3/25/2022 10:15	SIDING	WOOD	C	INTACT	YELLOW	BLDG SE OF F	Negative	< LOD
183	3/25/2022 10:15	SIDING	WOOD	D	INTACT	YELLOW	BLDG SE OF F	Negative	< LOD
184	3/25/2022 10:15	DOOR	WOOD	A	INTACT	BROWN	BLDG SE OF F	Negative	< LOD
185	3/25/2022 10:15	TRIM	WOOD	A	INTACT	YELLOW	BLDG SE OF F	Negative	< LOD
186	3/25/2022 10:15	TRIM	WOOD	B	INTACT	YELLOW	BLDG SE OF F	Negative	< LOD
187	3/25/2022 10:16	TRIM	WOOD	C	INTACT	YELLOW	BLDG SE OF F	Negative	< LOD
188	3/25/2022 10:16	TRIM	WOOD	D	INTACT	YELLOW	BLDG SE OF F	Negative	< LOD
189	3/25/2022 10:18	COLUMN	METAL	A	INTACT	YELLOW	CARPORT 13	Negative	< LOD
190	3/25/2022 10:19	COLUMN	METAL	A	INTACT	YELLOW	CARPORT 17	Negative	< LOD

Lead-Based Paint Inspection XRF Data
Inspection Date: 06/16, 20, 23/2022

Reading No	Time	Component	Substrate	Side	Condition	Color	Room	Unit	Results	Pb
1	6/16/2022 8:25									6.38
2	6/16/2022 8:30	nist				RED			Positive	1.1
3	6/16/2022 8:30	nist				RED			Negative	0.9
4	6/16/2022 8:31	nist				RED			Positive	1.1
5	6/16/2022 8:52	CEILING	DRYWALL		INTACT	WHITE	KITCHEN	A6	Negative	< LOD
6	6/16/2022 8:53	WALL	DRYWALL	A	INTACT	WHITE	KITCHEN	A6	Negative	< LOD
7	6/16/2022 8:53	WALL	DRYWALL	B	INTACT	WHITE	KITCHEN	A6	Negative	< LOD
8	6/16/2022 8:53	WALL	DRYWALL	C	INTACT	WHITE	KITCHEN	A6	Negative	< LOD
9	6/16/2022 8:54	WALL	DRYWALL	D	INTACT	WHITE	KITCHEN	A6	Negative	< LOD
10	6/16/2022 8:54	CABINET	WOOD	D	INTACT	BROWN	KITCHEN	A6	Negative	< LOD
11	6/16/2022 8:55	WALL	DRYWALL	A	INTACT	WHITE	dining	A6	Negative	< LOD
12	6/16/2022 8:55	WALL	DRYWALL	B	INTACT	WHITE	dining	A6	Negative	< LOD
13	6/16/2022 8:56	WALL	DRYWALL	C	INTACT	WHITE	dining	A6	Negative	< LOD
14	6/16/2022 8:56	WALL	DRYWALL	D	INTACT	WHITE	dining	A6	Negative	< LOD
15	6/16/2022 8:56	WINDOW	WOOD	C	INTACT	WHITE	dining	A6	Negative	< LOD
16	6/16/2022 8:57	CEILING	DRYWALL		INTACT	WHITE	dining	A6	Negative	< LOD
17	6/16/2022 8:58	CEILING	DRYWALL		INTACT	WHITE	LIVING ROOM	A6	Negative	< LOD
18	6/16/2022 8:58	WALL	DRYWALL	A	INTACT	WHITE	LIVING ROOM	A6	Negative	< LOD
19	6/16/2022 8:58	WALL	DRYWALL	B	INTACT	WHITE	LIVING ROOM	A6	Negative	< LOD
20	6/16/2022 8:59	WALL	DRYWALL	C	INTACT	WHITE	LIVING ROOM	A6	Negative	< LOD
21	6/16/2022 8:59	TRIM	WOOD	C	INTACT	WHITE	LIVING ROOM	A6	Negative	< LOD
22	6/16/2022 8:59	WALL	DRYWALL	D	INTACT	WHITE	LIVING ROOM	A6	Negative	< LOD
23	6/16/2022 9:00	BASEBOARD	WOOD	D	INTACT	WHITE	LIVING ROOM	A6	Negative	< LOD
24	6/16/2022 9:00	BASEBOARD	WOOD	D	INTACT	WHITE	DINING	A6	Negative	< LOD
25	6/16/2022 9:01	BASEBOARD	WOOD	A	INTACT	WHITE	KITCHEN	A6	Negative	< LOD
26	6/16/2022 9:02	CEILING	DRYWALL		INTACT	WHITE	N BED	A6	Negative	< LOD
27	6/16/2022 9:02	WALL	DRYWALL	A	INTACT	TAN	N BED	A6	Negative	< LOD
28	6/16/2022 9:02	BASEBOARD	WOOD	A	INTACT	TAN	N BED	A6	Negative	< LOD
29	6/16/2022 9:03	WINDOW	WOOD	A	INTACT	TAN	N BED	A6	Negative	< LOD
30	6/16/2022 9:03	WALL	DRYWALL	B	INTACT	TAN	N BED	A6	Negative	< LOD
31	6/16/2022 9:03	BASEBOARD	WOOD	B	INTACT	TAN	N BED	A6	Negative	< LOD
32	6/16/2022 9:04	TRIM	WOOD	C	INTACT	WHITE	N BED	A6	Negative	< LOD
33	6/16/2022 9:04	DOOR	WOOD	C	INTACT	WHITE	N BED	A6	Negative	< LOD

Reading No	Time	Component	Substrate	Side	Condition	Color	Room	Unit	Results	Pb
34	6/16/2022 9:04	JAMB	WOOD	C	INTACT	WHITE	N BED	A6	Negative	< LOD
35	6/16/2022 9:04	BASEBOARD	WOOD	C	INTACT	WHITE	N BED	A6	Negative	< LOD
36	6/16/2022 9:05	WALL	DRYWALL	C	INTACT	TAN	N BED	A6	Negative	< LOD
37	6/16/2022 9:05	WALL	DRYWALL	D	INTACT	TAN	N BED	A6	Negative	< LOD
38	6/16/2022 9:05	BASEBOARD	WOOD	D	INTACT	WHITE	N BED	A6	Negative	< LOD
39	6/16/2022 9:06	CEILING	DRYWALL		INTACT	WHITE	S BED	A6	Negative	< LOD
40	6/16/2022 9:07	WALL	DRYWALL	A	INTACT	TAN	S BED	A6	Negative	< LOD
41	6/16/2022 9:07	WALL	DRYWALL	B	INTACT	TAN	S BED	A6	Negative	< LOD
42	6/16/2022 9:07	WALL	DRYWALL	C	INTACT	TAN	S BED	A6	Negative	< LOD
43	6/16/2022 9:07	WALL	DRYWALL	D	INTACT	TAN	S BED	A6	Negative	< LOD
44	6/16/2022 9:08	WINDOW	WOOD	A	INTACT	WHITE	S BED	A6	Negative	< LOD
45	6/16/2022 9:08	BASEBOARD	WOOD	A	INTACT	WHITE	S BED	A6	Negative	< LOD
46	6/16/2022 9:08	BASEBOARD	WOOD	B	INTACT	WHITE	S BED	A6	Negative	< LOD
47	6/16/2022 9:08	BASEBOARD	WOOD	C	INTACT	WHITE	S BED	A6	Negative	< LOD
48	6/16/2022 9:09	BASEBOARD	WOOD	D	INTACT	WHITE	S BED	A6	Negative	< LOD
49	6/16/2022 9:09	CLOSET	WOOD	C	INTACT	WHITE	S BED	A6	Negative	< LOD
50	6/16/2022 9:09	TRIM	WOOD	C	INTACT	WHITE	S BED	A6	Negative	< LOD
51	6/16/2022 9:10	JAMB	WOOD	C	INTACT	WHITE	S BED	A6	Negative	< LOD
52	6/16/2022 9:10	DOOR	WOOD	C	INTACT	WHITE	S BED	A6	Negative	< LOD
53	6/16/2022 9:10	TRIM	WOOD	C	INTACT	WHITE	S BED	A6	Negative	< LOD
54	6/16/2022 9:11	JAMB	WOOD	C	INTACT	WHITE	S BED	A6	Negative	< LOD
55	6/16/2022 9:11	WALL	DRYWALL	A	INTACT	TAN	BATHROOM	A6	Negative	< LOD
56	6/16/2022 9:11	WALL	DRYWALL	B	INTACT	TAN	BATHROOM	A6	Negative	< LOD
57	6/16/2022 9:12	WALL	DRYWALL	C	INTACT	TAN	BATHROOM	A6	Negative	< LOD
58	6/16/2022 9:12	WALL	DRYWALL	D	INTACT	TAN	BATHROOM	A6	Negative	< LOD
59	6/16/2022 9:12	CEILING	DRYWALL		INTACT	TAN	BATHROOM	A6	Negative	< LOD
60	6/16/2022 9:13	DOOR	WOOD	A	INTACT	WHITE	BATHROOM	A6	Negative	< LOD
61	6/16/2022 9:13	TRIM	WOOD	A	INTACT	WHITE	BATHROOM	A6	Negative	< LOD
62	6/16/2022 9:13	JAMB	WOOD	A	INTACT	WHITE	BATHROOM	A6	Negative	< LOD
63	6/16/2022 9:13	BASEBOARD	WOOD	A	INTACT	WHITE	BATHROOM	A6	Negative	< LOD
64	6/16/2022 9:14	BASEBOARD	WOOD	B	INTACT	WHITE	BATHROOM	A6	Negative	< LOD
65	6/16/2022 9:14	BASEBOARD	WOOD	C	INTACT	WHITE	BATHROOM	A6	Negative	< LOD
66	6/16/2022 9:14	CABINET	WOOD	B	INTACT	BROWN	BATHROOM	A6	Negative	< LOD

Reading No	Time	Component	Substrate	Side	Condition	Color	Room	Unit	Results	Pb
67	6/16/2022 9:15	WALL	DRYWALL	A	INTACT	TAN	HALL	A6	Negative	< LOD
68	6/16/2022 9:15	WALL	DRYWALL	B	INTACT	TAN	HALL	A6	Negative	< LOD
69	6/16/2022 9:15	WALL	DRYWALL	C	INTACT	TAN	HALL	A6	Negative	< LOD
70	6/16/2022 9:16	WALL	DRYWALL	D	INTACT	TAN	HALL	A6	Negative	< LOD
71	6/16/2022 9:16	CEILING	DRYWALL		INTACT	WHITE	HALL	A6	Negative	< LOD
72	6/16/2022 9:17	CLOSET	WOOD	B	INTACT	WHITE	HALL	A6	Negative	< LOD
73	6/16/2022 9:17	CLOSET	WOOD	C	INTACT	WHITE	HALL	A6	Negative	< LOD
74	6/16/2022 9:17	TRIM	WOOD	C	INTACT	WHITE	HALL	A6	Negative	< LOD
75	6/16/2022 9:18	JAMB	WOOD	C	INTACT	WHITE	HALL	A6	Negative	< LOD
76	6/16/2022 9:19	DOOR	WOOD	A	INTACT	WHITE	HALL	A6	Negative	< LOD
77	6/16/2022 9:19	TRIM	WOOD	A	INTACT	WHITE	HALL	A6	Negative	< LOD
78	6/16/2022 9:19	JAMB	WOOD	A	INTACT	WHITE	HALL	A6	Negative	< LOD
79	6/16/2022 9:25	WALL	DRYWALL	A	INTACT	GRAY	KITCHEN	C 6	Negative	< LOD
80	6/16/2022 9:25	WALL	DRYWALL	B	INTACT	GRAY	KITCHEN	C 6	Negative	< LOD
81	6/16/2022 9:25	WALL	DRYWALL	C	INTACT	GRAY	KITCHEN	C 6	Negative	< LOD
82	6/16/2022 9:25	WALL	DRYWALL	D	INTACT	GRAY	KITCHEN	C 6	Negative	< LOD
83	6/16/2022 9:26	CEILING	DRYWALL		INTACT	gray	KITCHEN	C 6	Negative	< LOD
84	6/16/2022 9:26	BASEBOARD	WOOD	A	INTACT	WHITE	KITCHEN	C 6	Negative	< LOD
85	6/16/2022 9:26	BASEBOARD	WOOD	C	INTACT	WHITE	KITCHEN	C 6	Negative	< LOD
86	6/16/2022 9:27	CABINET	WOOD	B	INTACT	BROWN	KITCHEN	C 6	Negative	< LOD
87	6/16/2022 9:27	WALL	DRYWALL	A	INTACT	GRAY	DINING	C 6	Negative	< LOD
88	6/16/2022 9:27	WALL	DRYWALL	C	INTACT	GRAY	DINING	C 6	Negative	< LOD
89	6/16/2022 9:28	WALL	DRYWALL	D	INTACT	GRAY	DINING	C 6	Negative	< LOD
90	6/16/2022 9:28	CEILING	DRYWALL		INTACT	WHITE	DINING	C 6	Negative	< LOD
91	6/16/2022 9:29	BASEBOARD	WOOD	A	INTACT	WHITE	DINING	C 6	Negative	< LOD
92	6/16/2022 9:29	BASEBOARD	WOOD	C	INTACT	WHITE	DINING	C 6	Negative	< LOD
93	6/16/2022 9:29	BASEBOARD	WOOD	D	INTACT	WHITE	DINING	C 6	Negative	< LOD
94	6/16/2022 9:29	WINDOW	WOOD	C	INTACT	WHITE	DINING	C 6	Negative	< LOD
95	6/16/2022 9:31	WALL	DRYWALL	A	INTACT	GRAY	DINING	C 6	Null	< LOD
96	6/16/2022 9:31	WALL	DRYWALL	A	INTACT	GRAY	LIVING ROOM	C 6	Negative	< LOD
97	6/16/2022 9:31	WALL	DRYWALL	B	INTACT	GRAY	LIVING ROOM	C 6	Negative	< LOD
98	6/16/2022 9:32	WALL	DRYWALL	C	INTACT	GRAY	LIVING ROOM	C 6	Negative	< LOD
99	6/16/2022 9:32	WALL	DRYWALL	D	INTACT	GRAY	LIVING ROOM	C 6	Negative	< LOD

Reading No	Time	Component	Substrate	Side	Condition	Color	Room	Unit	Results	Pb
100	6/16/2022 9:33	CEILING	DRYWALL		INTACT	WHITE	LIVING ROOM	C 6	Negative	< LOD
101	6/16/2022 9:34	BASEBOARD	WOOD	A	INTACT	WHITE	LIVING ROOM	C 6	Negative	< LOD
102	6/16/2022 9:34	BASEBOARD	WOOD	B	INTACT	WHITE	LIVING ROOM	C 6	Negative	< LOD
103	6/16/2022 9:34	BASEBOARD	WOOD	C	INTACT	WHITE	LIVING ROOM	C 6	Negative	< LOD
104	6/16/2022 9:34	BASEBOARD	WOOD	D	INTACT	WHITE	LIVING ROOM	C 6	Negative	< LOD
105	6/16/2022 9:35	TRIM	WOOD	C	INTACT	WHITE	LIVING ROOM	C 6	Negative	< LOD
106	6/16/2022 9:36	WALL	DRYWALL	A	INTACT	GRAY	BEDROOM	C 6	Negative	< LOD
107	6/16/2022 9:36	WALL	DRYWALL	B	INTACT	GRAY	BEDROOM	C 6	Negative	< LOD
108	6/16/2022 9:36	WALL	DRYWALL	C	INTACT	GRAY	BEDROOM	C 6	Negative	< LOD
109	6/16/2022 9:36	WALL	DRYWALL	D	INTACT	GRAY	BEDROOM	C 6	Negative	< LOD
110	6/16/2022 9:37	CEILING	DRYWALL		INTACT	WHITE	BEDROOM	C 6	Negative	< LOD
111	6/16/2022 9:37	WINDOW	WOOD	A	INTACT	WHITE	BEDROOM	C 6	Negative	< LOD
112	6/16/2022 9:38	CLOSET	WOOD	B	INTACT	WHITE	BEDROOM	C 6	Negative	< LOD
113	6/16/2022 9:38	TRIM	WOOD	B	INTACT	WHITE	BEDROOM	C 6	Negative	< LOD
114	6/16/2022 9:38	JAMB	WOOD	B	INTACT	WHITE	BEDROOM	C 6	Negative	< LOD
115	6/16/2022 9:39	DOOR	WOOD	C	INTACT	WHITE	BEDROOM	C 6	Negative	< LOD
116	6/16/2022 9:39	TRIM	WOOD	C	INTACT	WHITE	BEDROOM	C 6	Negative	< LOD
117	6/16/2022 9:39	JAMB	WOOD	C	INTACT	WHITE	BEDROOM	C 6	Negative	< LOD
118	6/16/2022 9:39	BASEBOARD	WOOD	A	INTACT	WHITE	BEDROOM	C 6	Negative	< LOD
119	6/16/2022 9:40	BASEBOARD	WOOD	B	INTACT	WHITE	BEDROOM	C 6	Negative	< LOD
120	6/16/2022 9:40	BASEBOARD	WOOD	C	INTACT	WHITE	BEDROOM	C 6	Negative	< LOD
121	6/16/2022 9:40	BASEBOARD	WOOD	D	INTACT	WHITE	BEDROOM	C 6	Negative	< LOD
122	6/16/2022 9:41	WALL	DRYWALL	A	INTACT	GRAY	BATHROOM	C 6	Negative	< LOD
123	6/16/2022 9:42	WALL	DRYWALL	B	INTACT	GRAY	BATHROOM	C 6	Negative	< LOD
124	6/16/2022 9:42	WALL	DRYWALL	C	INTACT	GRAY	BATHROOM	C 6	Negative	< LOD
125	6/16/2022 9:43	WALL	DRYWALL	D	INTACT	GRAY	BATHROOM	C 6	Negative	< LOD
126	6/16/2022 9:43	CEILING	DRYWALL		INTACT	GRAY	BATHROOM	C 6	Negative	< LOD
127	6/16/2022 9:43	DOOR	WOOD	A	INTACT	WHITE	BATHROOM	C 6	Negative	< LOD
128	6/16/2022 9:43	TRIM	WOOD	A	INTACT	WHITE	BATHROOM	C 6	Negative	< LOD
129	6/16/2022 9:44	JAMB	WOOD	A	INTACT	WHITE	BATHROOM	C 6	Negative	< LOD
130	6/16/2022 9:44	BASEBOARD	WOOD	A	INTACT	WHITE	BATHROOM	C 6	Negative	< LOD
131	6/16/2022 9:44	BASEBOARD	WOOD	C	INTACT	WHITE	BATHROOM	C 6	Negative	< LOD
132	6/16/2022 9:44	BASEBOARD	WOOD	D	INTACT	WHITE	BATHROOM	C 6	Negative	< LOD

Reading No	Time	Component	Substrate	Side	Condition	Color	Room	Unit	Results	Pb
133	6/16/2022 9:45	CABINET	WOOD	C	INTACT	BROWN	BATHROOM	C 6	Negative	< LOD
134	6/16/2022 9:45	WALL	DRYWALL	A	INTACT	GRAY	HALL	C 6	Negative	< LOD
135	6/16/2022 9:46	WALL	DRYWALL	B	INTACT	GRAY	HALL	C 6	Negative	< LOD
136	6/16/2022 9:46	WALL	DRYWALL	C	INTACT	GRAY	HALL	C 6	Negative	< LOD
137	6/16/2022 9:46	WALL	DRYWALL	D	INTACT	GRAY	HALL	C 6	Negative	< LOD
138	6/16/2022 9:46	WALL	DRYWALL	D	INTACT	GRAY	HALL	C 6	Negative	< LOD
139	6/16/2022 9:47	CEILING	DRYWALL		INTACT	WHITE	HALL	C 6	Negative	< LOD
140	6/16/2022 9:47	DOOR	WOOD	A	INTACT	WHITE	HALL	C 6	Negative	< LOD
141	6/16/2022 9:47	TRIM	WOOD	A	INTACT	WHITE	HALL	C 6	Negative	< LOD
142	6/16/2022 9:48	JAMB	WOOD	A	INTACT	WHITE	HALL	C 6	Negative	< LOD
143	6/16/2022 9:48	CLOSET	WOOD	B	INTACT	WHITE	HALL	C 6	Negative	< LOD
144	6/16/2022 9:48	TRIM	WOOD	B	INTACT	WHITE	HALL	C 6	Negative	< LOD
145	6/16/2022 9:48	JAMB	WOOD	B	INTACT	WHITE	HALL	C 6	Negative	< LOD
146	6/16/2022 9:49	BASEBOARD	WOOD	A	INTACT	WHITE	HALL	C 6	Negative	< LOD
147	6/16/2022 9:49	BASEBOARD	WOOD	C	INTACT	WHITE	HALL	C 6	Negative	< LOD
148	6/16/2022 9:50	BASEBOARD	WOOD	D	INTACT	WHITE	HALL	C 6	Negative	< LOD
149	6/16/2022 9:52	WALL	DRYWALL	A	INTACT	GRAY	BATHROOM	C3	Negative	< LOD
150	6/16/2022 9:52	WALL	DRYWALL	B	INTACT	GRAY	BATHROOM	C3	Negative	< LOD
151	6/16/2022 9:52	WALL	DRYWALL	C	INTACT	GRAY	BATHROOM	C3	Negative	< LOD
152	6/16/2022 9:52	WALL	DRYWALL	D	INTACT	GRAY	BATHROOM	C3	Null	< LOD
153	6/16/2022 9:52	WALL	DRYWALL	D	INTACT	GRAY	BATHROOM	C3	Null	< LOD
154	6/16/2022 9:53	WALL	DRYWALL	D	INTACT	GRAY	BATHROOM	C3	Negative	< LOD
155	6/16/2022 9:53	CEILING	DRYWALL	D	INTACT	GRAY	BATHROOM	C3	Negative	< LOD
156	6/16/2022 9:53	DOOR	WOOD	A	INTACT	WHITE	BATHROOM	C3	Negative	< LOD
157	6/16/2022 9:53	TRIM	WOOD	A	INTACT	WHITE	BATHROOM	C3	Negative	< LOD
158	6/16/2022 9:54	jamb	WOOD	A	INTACT	WHITE	BATHROOM	C3	Negative	< LOD
159	6/16/2022 9:54	BASEBOARD	WOOD	A	INTACT	WHITE	BATHROOM	C3	Negative	< LOD
160	6/16/2022 9:54	BASEBOARD	WOOD	B	INTACT	WHITE	BATHROOM	C3	Negative	< LOD
161	6/16/2022 9:54	BASEBOARD	WOOD	C	INTACT	WHITE	BATHROOM	C3	Negative	< LOD
162	6/16/2022 9:55	CABINET	WOOD	C	INTACT	BROWN	BATHROOM	C3	Negative	< LOD
163	6/16/2022 9:55	WALL	DRYWALL	A	INTACT	gray	BEDROOM	C3	Negative	< LOD
164	6/16/2022 9:56	WALL	DRYWALL	B	INTACT	gray	BEDROOM	C3	Negative	< LOD
165	6/16/2022 9:56	WALL	DRYWALL	C	INTACT	gray	BEDROOM	C3	Negative	< LOD

Reading No	Time	Component	Substrate	Side	Condition	Color	Room	Unit	Results	Pb
166	6/16/2022 9:56	WALL	DRYWALL	D	INTACT	gray	BEDROOM	C3	Negative	< LOD
167	6/16/2022 9:57	CEILING	DRYWALL		INTACT	WHITE	BEDROOM	C3	Negative	< LOD
168	6/16/2022 9:57	WINDOW	WOOD	A	INTACT	WHITE	BEDROOM	C3	Negative	< LOD
169	6/16/2022 9:58	DOOR	WOOD	C	INTACT	WHITE	BEDROOM	C3	Negative	< LOD
170	6/16/2022 9:58	TRIM	WOOD	C	INTACT	WHITE	BEDROOM	C3	Negative	< LOD
171	6/16/2022 9:58	jamb	WOOD	C	INTACT	WHITE	BEDROOM	C3	Negative	< LOD
172	6/16/2022 9:58	CLOSET	WOOD	D	INTACT	WHITE	BEDROOM	C3	Negative	< LOD
173	6/16/2022 9:58	TRIM	WOOD	D	INTACT	WHITE	BEDROOM	C3	Negative	< LOD
174	6/16/2022 9:59	jamb	WOOD	D	INTACT	WHITE	BEDROOM	C3	Negative	< LOD
175	6/16/2022 9:59	BASEBOARD	WOOD	A	INTACT	WHITE	BEDROOM	C3	Negative	< LOD
176	6/16/2022 9:59	BASEBOARD	WOOD	B	INTACT	WHITE	BEDROOM	C3	Negative	< LOD
177	6/16/2022 9:59	BASEBOARD	WOOD	C	INTACT	WHITE	BEDROOM	C3	Negative	< LOD
178	6/16/2022 10:00	BASEBOARD	WOOD	D	INTACT	WHITE	BEDROOM	C3	Negative	< LOD
179	6/16/2022 10:00	WALL	DRYWALL	A	INTACT	gray	HALL	C3	Negative	< LOD
180	6/16/2022 10:00	WALL	DRYWALL	B	INTACT	gray	HALL	C3	Negative	< LOD
181	6/16/2022 10:01	WALL	DRYWALL	C	INTACT	gray	HALL	C3	Negative	< LOD
182	6/16/2022 10:01	WALL	DRYWALL	D	INTACT	gray	HALL	C3	Negative	< LOD
183	6/16/2022 10:02	CEILING	DRYWALL		INTACT	WHITE	HALL	C3	Negative	< LOD
184	6/16/2022 10:02	DOOR	WOOD	A	INTACT	WHITE	HALL	C3	Null	< LOD
185	6/16/2022 10:02	DOOR	WOOD	A	INTACT	WHITE	HALL	C3	Negative	< LOD
186	6/16/2022 10:02	TRIM	WOOD	A	INTACT	WHITE	HALL	C3	Negative	< LOD
187	6/16/2022 10:03	jamb	WOOD	A	INTACT	WHITE	HALL	C3	Negative	< LOD
188	6/16/2022 10:03	CLOSET	WOOD	D	INTACT	WHITE	HALL	C3	Negative	< LOD
189	6/16/2022 10:03	TRIM	WOOD	D	INTACT	WHITE	HALL	C3	Negative	< LOD
190	6/16/2022 10:03	jamb	WOOD	D	INTACT	WHITE	HALL	C3	Negative	< LOD
191	6/16/2022 10:04	BASEBOARD	WOOD	A	INTACT	WHITE	HALL	C3	Negative	< LOD
192	6/16/2022 10:04	BASEBOARD	WOOD	B	INTACT	WHITE	HALL	C3	Negative	< LOD
193	6/16/2022 10:04	BASEBOARD	WOOD	C	INTACT	WHITE	HALL	C3	Negative	< LOD
194	6/16/2022 10:05	WALL	DRYWALL	A	INTACT	gray	KITCHEN	C3	Negative	< LOD
195	6/16/2022 10:05	WALL	DRYWALL	B	INTACT	gray	KITCHEN	C3	Negative	< LOD
196	6/16/2022 10:05	WALL	DRYWALL	C	INTACT	gray	KITCHEN	C3	Negative	< LOD
197	6/16/2022 10:06	WALL	DRYWALL	D	INTACT	gray	KITCHEN	C3	Negative	< LOD
198	6/16/2022 10:06	CEILING	DRYWALL		INTACT	gray	KITCHEN	C3	Null	< LOD

Reading No	Time	Component	Substrate	Side	Condition	Color	Room	Unit	Results	Pb
199	6/16/2022 10:06	CEILING	DRYWALL		INTACT	gray	KITCHEN	C3	Negative	< LOD
200	6/16/2022 10:07	CABINET	WOOD	B	INTACT	BROWN	KITCHEN	C3	Negative	< LOD
201	6/16/2022 10:07	BASEBOARD	WOOD	A	INTACT	WHITE	KITCHEN	C3	Negative	< LOD
202	6/16/2022 10:07	BASEBOARD	WOOD	C	INTACT	WHITE	KITCHEN	C3	Negative	< LOD
203	6/16/2022 10:08	WALL	DRYWALL	A	INTACT	gray	LIVING ROOM	C3	Negative	< LOD
204	6/16/2022 10:08	WALL	DRYWALL	B	INTACT	gray	LIVING ROOM	C3	Negative	< LOD
205	6/16/2022 10:08	WALL	DRYWALL	C	INTACT	gray	LIVING ROOM	C3	Negative	< LOD
206	6/16/2022 10:09	WALL	DRYWALL	D	INTACT	gray	LIVING ROOM	C3	Negative	< LOD
207	6/16/2022 10:09	CEILING	DRYWALL		INTACT	WHITE	LIVING ROOM	C3	Negative	< LOD
208	6/16/2022 10:10	TRIM	WOOD	C	INTACT	WHITE	LIVING ROOM	C3	Negative	< LOD
209	6/16/2022 10:10	BASEBOARD	WOOD	A	INTACT	WHITE	LIVING ROOM	C3	Negative	< LOD
210	6/16/2022 10:10	BASEBOARD	WOOD	B	INTACT	WHITE	LIVING ROOM	C3	Negative	< LOD
211	6/16/2022 10:11	BASEBOARD	WOOD	C	INTACT	WHITE	LIVING ROOM	C3	Negative	< LOD
212	6/16/2022 10:11	BASEBOARD	WOOD	D	INTACT	WHITE	LIVING ROOM	C3	Negative	< LOD
213	6/16/2022 10:11	WALL	DRYWALL	A	INTACT	WHITE	dining	C3	Negative	< LOD
214	6/16/2022 10:12	WALL	DRYWALL	B	INTACT	gray	dining	C3	Negative	< LOD
215	6/16/2022 10:12	WALL	DRYWALL	C	INTACT	gray	dining	C3	Negative	< LOD
216	6/16/2022 10:13	CEILING	DRYWALL		INTACT	WHITE	dining	C3	Negative	< LOD
217	6/16/2022 10:13	BASEBOARD	WOOD	A	INTACT	WHITE	dining	C3	Negative	< LOD
218	6/16/2022 10:13	BASEBOARD	WOOD	B	INTACT	WHITE	dining	C3	Negative	< LOD
219	6/16/2022 10:13	WINDOW	WOOD	C	INTACT	WHITE	dining	C3	Negative	< LOD
220	6/16/2022 10:17	WALL	DRYWALL	A	INTACT	gray	HALL	C2	Negative	< LOD
221	6/16/2022 10:17	WALL	DRYWALL	B	INTACT	gray	HALL	C2	Negative	< LOD
222	6/16/2022 10:18	WALL	DRYWALL	C	INTACT	gray	HALL	C2	Negative	< LOD
223	6/16/2022 10:18	WALL	DRYWALL	D	INTACT	gray	HALL	C2	Negative	< LOD
224	6/16/2022 10:18	CEILING	DRYWALL		INTACT	WHITE	HALL	C2	Null	< LOD
225	6/16/2022 10:18	CEILING	DRYWALL		INTACT	WHITE	HALL	C2	Negative	< LOD
226	6/16/2022 10:19	DOOR	WOOD	A	INTACT	WHITE	HALL	C2	Negative	< LOD
227	6/16/2022 10:19	TRIM	WOOD	A	INTACT	WHITE	HALL	C2	Negative	< LOD
228	6/16/2022 10:19	jamb	WOOD	A	INTACT	WHITE	HALL	C2	Negative	< LOD
229	6/16/2022 10:19	BASEBOARD	WOOD	A	INTACT	WHITE	HALL	C2	Negative	< LOD
230	6/16/2022 10:20	BASEBOARD	WOOD	C	INTACT	WHITE	HALL	C2	Negative	< LOD
231	6/16/2022 10:20	BASEBOARD	WOOD	D	INTACT	WHITE	HALL	C2	Negative	< LOD

Reading No	Time	Component	Substrate	Side	Condition	Color	Room	Unit	Results	Pb
232	6/16/2022 10:20	CLOSET	WOOD	B	INTACT	WHITE	HALL	C2	Negative	< LOD
233	6/16/2022 10:20	TRIM	WOOD	B	INTACT	WHITE	HALL	C2	Negative	< LOD
234	6/16/2022 10:21	jamb	WOOD	B	INTACT	WHITE	HALL	C2	Negative	< LOD
235	6/16/2022 10:21	CLOSET	WOOD	C	INTACT	WHITE	HALL	C2	Negative	< LOD
236	6/16/2022 10:22	WALL	DRYWALL	A	INTACT	gray	BEDROOM	C2	Negative	< LOD
237	6/16/2022 10:22	WALL	DRYWALL	B	INTACT	gray	BEDROOM	C2	Negative	< LOD
238	6/16/2022 10:22	WALL	DRYWALL	C	INTACT	gray	BEDROOM	C2	Negative	< LOD
239	6/16/2022 10:22	WALL	DRYWALL	D	INTACT	gray	BEDROOM	C2	Negative	< LOD
240	6/16/2022 10:23	CEILING	DRYWALL		INTACT	WHITE	BEDROOM	C2	Negative	< LOD
241	6/16/2022 10:23	WINDOW	WOOD	A	INTACT	WHITE	BEDROOM	C2	Negative	< LOD
242	6/16/2022 10:23	BASEBOARD	WOOD	A	INTACT	WHITE	BEDROOM	C2	Negative	< LOD
243	6/16/2022 10:24	BASEBOARD	WOOD	B	INTACT	WHITE	BEDROOM	C2	Negative	< LOD
244	6/16/2022 10:24	CLOSET	WOOD	B	INTACT	WHITE	BEDROOM	C2	Negative	< LOD
245	6/16/2022 10:24	TRIM	WOOD	B	INTACT	WHITE	BEDROOM	C2	Negative	< LOD
246	6/16/2022 10:24	jamb	WOOD	B	INTACT	WHITE	BEDROOM	C2	Negative	< LOD
247	6/16/2022 10:25	jamb	WOOD	C	INTACT	WHITE	BEDROOM	C2	Negative	< LOD
248	6/16/2022 10:25	TRIM	WOOD	C	INTACT	WHITE	BEDROOM	C2	Negative	< LOD
249	6/16/2022 10:25	DOOR	WOOD	C	INTACT	WHITE	BEDROOM	C2	Negative	< LOD
250	6/16/2022 10:25	BASEBOARD	WOOD	C	INTACT	WHITE	BEDROOM	C2	Negative	< LOD
251	6/16/2022 10:25	BASEBOARD	WOOD	D	INTACT	WHITE	BEDROOM	C2	Negative	< LOD
252	6/16/2022 10:26	BASEBOARD	WOOD	A	INTACT	WHITE	BATHROOM	C2	Negative	< LOD
253	6/16/2022 10:26	BASEBOARD	WOOD	B	INTACT	WHITE	BATHROOM	C2	Negative	< LOD
254	6/16/2022 10:27	BASEBOARD	WOOD	C	INTACT	WHITE	BATHROOM	C2	Negative	< LOD
255	6/16/2022 10:27	BASEBOARD	WOOD	D	INTACT	WHITE	BATHROOM	C2	Negative	< LOD
256	6/16/2022 10:27	WALL	DRYWALL	A	INTACT	gray	BATHROOM	C2	Negative	< LOD
257	6/16/2022 10:28	WALL	DRYWALL	B	INTACT	gray	BATHROOM	C2	Negative	< LOD
258	6/16/2022 10:28	WALL	DRYWALL	C	INTACT	gray	BATHROOM	C2	Negative	< LOD
259	6/16/2022 10:28	WALL	DRYWALL	D	INTACT	gray	BATHROOM	C2	Negative	< LOD
260	6/16/2022 10:28	CEILING	DRYWALL		INTACT	gray	BATHROOM	C2	Negative	< LOD
261	6/16/2022 10:29	DOOR	WOOD	A	INTACT	WHITE	BATHROOM	C2	Null	< LOD
262	6/16/2022 10:29	DOOR	WOOD	A	INTACT	WHITE	BATHROOM	C2	Negative	< LOD
263	6/16/2022 10:29	TRIM	WOOD	A	INTACT	WHITE	BATHROOM	C2	Negative	< LOD
264	6/16/2022 10:29	jamb	WOOD	A	INTACT	WHITE	BATHROOM	C2	Negative	< LOD

Reading No	Time	Component	Substrate	Side	Condition	Color	Room	Unit	Results	Pb
265	6/16/2022 10:29	CABINET	WOOD	C	INTACT	BROWN	BATHROOM	C2	Negative	< LOD
266	6/16/2022 10:30	WALL	DRYWALL	A	INTACT	gray	KITCHEN	C2	Negative	< LOD
267	6/16/2022 10:31	WALL	DRYWALL	B	INTACT	gray	KITCHEN	C2	Negative	< LOD
268	6/16/2022 10:31	WALL	DRYWALL	C	INTACT	gray	KITCHEN	C2	Negative	< LOD
269	6/16/2022 10:31	WALL	DRYWALL	D	INTACT	gray	KITCHEN	C2	Negative	< LOD
270	6/16/2022 10:31	CEILING	DRYWALL		INTACT	gray	KITCHEN	C2	Negative	< LOD
271	6/16/2022 10:32	BASEBOARD	WOOD	A	INTACT	WHITE	KITCHEN	C2	Negative	< LOD
272	6/16/2022 10:32	CABINET	WOOD	B	INTACT	BROWN	KITCHEN	C2	Negative	< LOD
273	6/16/2022 10:33	WALL	DRYWALL	A	INTACT	gray	dining	C2	Negative	< LOD
274	6/16/2022 10:33	WALL	DRYWALL	C	INTACT	gray	dining	C2	Negative	< LOD
275	6/16/2022 10:33	WALL	DRYWALL	D	INTACT	gray	dining	C2	Negative	< LOD
276	6/16/2022 10:33	CEILING	DRYWALL		INTACT	WHITE	dining	C2	Negative	< LOD
277	6/16/2022 10:34	BASEBOARD	WOOD	A	INTACT	WHITE	dining	C2	Negative	< LOD
278	6/16/2022 10:34	BASEBOARD	WOOD	C	INTACT	WHITE	dining	C2	Negative	< LOD
279	6/16/2022 10:34	BASEBOARD	WOOD	D	INTACT	WHITE	dining	C2	Negative	< LOD
280	6/16/2022 10:35	WINDOW	WOOD	C	INTACT	WHITE	dining	C2	Negative	< LOD
281	6/16/2022 10:35	WALL	DRYWALL	A	INTACT	gray	LIVING ROOM	C2	Negative	< LOD
282	6/16/2022 10:36	WALL	DRYWALL	B	INTACT	gray	LIVING ROOM	C2	Negative	< LOD
283	6/16/2022 10:36	WALL	DRYWALL	C	INTACT	gray	LIVING ROOM	C2	Negative	< LOD
284	6/16/2022 10:36	WALL	DRYWALL	D	INTACT	gray	LIVING ROOM	C2	Negative	< LOD
285	6/16/2022 10:36	CEILING	DRYWALL		INTACT	WHITE	LIVING ROOM	C2	Negative	< LOD
286	6/16/2022 10:37	BASEBOARD	WOOD	A	INTACT	WHITE	LIVING ROOM	C2	Null	< LOD
287	6/16/2022 10:37	BASEBOARD	WOOD	A	INTACT	WHITE	LIVING ROOM	C2	Negative	< LOD
288	6/16/2022 10:37	BASEBOARD	WOOD	B	INTACT	WHITE	LIVING ROOM	C2	Null	< LOD
289	6/16/2022 10:37	BASEBOARD	WOOD	B	INTACT	WHITE	LIVING ROOM	C2	Negative	< LOD
290	6/16/2022 10:38	BASEBOARD	WOOD	C	INTACT	WHITE	LIVING ROOM	C2	Negative	< LOD
291	6/16/2022 10:38	BASEBOARD	WOOD	D	INTACT	WHITE	LIVING ROOM	C2	Negative	< LOD
292	6/16/2022 10:38	TRIM	WOOD	C	INTACT	WHITE	LIVING ROOM	C2	Negative	< LOD
293	6/16/2022 10:48	WALL	DRYWALL	A	INTACT	gray	LIVING ROOM-kitchen	D6	Negative	< LOD
294	6/16/2022 10:48	WALL	DRYWALL	B	INTACT	gray	LIVING ROOM-kitchen	D6	Null	< LOD
295	6/16/2022 10:48	WALL	DRYWALL	A	INTACT	gray	KITCHEN	D6	Negative	< LOD
296	6/16/2022 10:49	WALL	DRYWALL	B	INTACT	gray	KITCHEN	D6	Negative	< LOD
297	6/16/2022 10:49	WALL	DRYWALL	C	INTACT	gray	KITCHEN	D6	Negative	< LOD

Reading No	Time	Component	Substrate	Side	Condition	Color	Room	Unit	Results	Pb
298	6/16/2022 10:49	WALL	DRYWALL	C	INTACT	gray	KITCHEN	D6	Negative	< LOD
299	6/16/2022 10:49	WALL	DRYWALL	D	INTACT	gray	KITCHEN	D6	Negative	< LOD
300	6/16/2022 10:50	CEILING	DRYWALL		INTACT	WHITE	KITCHEN	D6	Negative	< LOD
301	6/16/2022 10:50	DOOR	METAL	A	INTACT	RED	KITCHEN	D6	Negative	< LOD
302	6/16/2022 10:50	TRIM	WOOD	A	INTACT	WHITE	KITCHEN	D6	Negative	< LOD
303	6/16/2022 10:52	jamb	WOOD	A	INTACT	WHITE	KITCHEN	D6	Negative	< LOD
304	6/16/2022 10:53	WALL	DRYWALL	A	INTACT	GRAY	KITCHEN	D6	Negative	< LOD
305	6/16/2022 10:53	WALL	DRYWALL	B	INTACT	GRAY	KITCHEN	D6	Negative	< LOD
306	6/16/2022 10:53	WALL	DRYWALL	C	INTACT	GRAY	KITCHEN	D6	Negative	< LOD
307	6/16/2022 10:53	WALL	DRYWALL	D	INTACT	GRAY	KITCHEN	D6	Negative	< LOD
308	6/16/2022 10:54	WALL	DRYWALL	D	INTACT	GRAY	LIVING ROOM	D6	Negative	< LOD
309	6/16/2022 10:54	WALL	DRYWALL	B	INTACT	GRAY	LIVING ROOM	D6	Negative	< LOD
310	6/16/2022 10:54	WALL	DRYWALL	C	INTACT	GRAY	LIVING ROOM	D6	Negative	< LOD
311	6/16/2022 10:54	WALL	DRYWALL	D	INTACT	GRAY	LIVING ROOM	D6	Negative	< LOD
312	6/16/2022 10:55	WINDOW	WOOD	A	INTACT	WHITE	LIVING ROOM	D6	Negative	< LOD
313	6/16/2022 10:55	BASEBOARD	WOOD	A	INTACT	WHITE	LIVING ROOM	D6	Negative	< LOD
314	6/16/2022 10:56	BASEBOARD	WOOD	B	INTACT	WHITE	LIVING ROOM	D6	Negative	< LOD
315	6/16/2022 10:56	BASEBOARD	WOOD	C	INTACT	WHITE	LIVING ROOM	D6	Negative	< LOD
316	6/16/2022 10:56	BASEBOARD	WOOD	D	INTACT	WHITE	LIVING ROOM	D6	Negative	< LOD
317	6/16/2022 10:57	CABINET	WOOD	B	INTACT	BROWN	KITCHEN	D6	Negative	< LOD
318	6/16/2022 10:57	WALL	DRYWALL	A	INTACT	GRAY	BATHROOM	D6	Negative	< LOD
319	6/16/2022 10:58	WALL	DRYWALL	B	INTACT	GRAY	BATHROOM	D6	Negative	< LOD
320	6/16/2022 10:58	WALL	DRYWALL	C	INTACT	GRAY	BATHROOM	D6	Negative	< LOD
321	6/16/2022 10:58	WALL	DRYWALL	D	INTACT	GRAY	BATHROOM	D6	Negative	< LOD
322	6/16/2022 10:58	CEILING	DRYWALL		INTACT	GRAY	BATHROOM	D6	Negative	< LOD
323	6/16/2022 10:59	DOOR	WOOD	B	INTACT	WHITE	BATHROOM	D6	Negative	< LOD
324	6/16/2022 10:59	TRIM	WOOD	B	INTACT	WHITE	BATHROOM	D6	Negative	< LOD
325	6/16/2022 10:59	JAMB	WOOD	B	INTACT	WHITE	BATHROOM	D6	Negative	< LOD
326	6/16/2022 10:59	CABINET	WOOD	C	INTACT	BROWN	BATHROOM	D6	Negative	< LOD
327	6/16/2022 11:00	WALL	DRYWALL	A	INTACT	GRAY	BEDROOM	D6	Negative	< LOD
328	6/16/2022 11:00	WALL	DRYWALL	B	INTACT	GRAY	BEDROOM	D6	Negative	< LOD
329	6/16/2022 11:01	WALL	DRYWALL	C	INTACT	GRAY	BEDROOM	D6	Negative	< LOD
330	6/16/2022 11:01	WALL	DRYWALL	D	INTACT	GRAY	BEDROOM	D6	Negative	< LOD

Reading No	Time	Component	Substrate	Side	Condition	Color	Room	Unit	Results	Pb
331	6/16/2022 11:01	CEILING	DRYWALL		INTACT	WHITE	BEDROOM	D6	Negative	< LOD
332	6/16/2022 11:02	WINDOW	WOOD	A	INTACT	WHITE	BEDROOM	D6	Negative	< LOD
333	6/16/2022 11:02	BASEBOARD	WOOD	A	INTACT	WHITE	BEDROOM	D6	Negative	< LOD
334	6/16/2022 11:03	BASEBOARD	WOOD	B	INTACT	WHITE	BEDROOM	D6	Negative	< LOD
335	6/16/2022 11:03	BASEBOARD	WOOD	C	INTACT	WHITE	BEDROOM	D6	Negative	< LOD
336	6/16/2022 11:03	BASEBOARD	WOOD	D	INTACT	WHITE	BEDROOM	D6	Negative	< LOD
337	6/16/2022 11:04	DOOR	WOOD	C	INTACT	WHITE	BEDROOM	D6	Negative	< LOD
338	6/16/2022 11:04	TRIM	WOOD	C	INTACT	WHITE	BEDROOM	D6	Negative	< LOD
339	6/16/2022 11:04	JAMB	WOOD	C	INTACT	WHITE	BEDROOM	D6	Negative	< LOD
340	6/16/2022 11:12	WALL	DRYWALL	A	INTACT	GRAY1	KITCHEN	E12	Negative	< LOD
341	6/16/2022 11:12	WALL	DRYWALL	B	INTACT	GRAY1	KITCHEN	E12	Negative	< LOD
342	6/16/2022 11:12	WALL	DRYWALL	C	INTACT	GRAY1	KITCHEN	E12	Negative	< LOD
343	6/16/2022 11:12	WALL	DRYWALL	D	INTACT	GRAY1	KITCHEN	E12	Negative	< LOD
344	6/16/2022 11:13	BASEBOARD	PLASTER	A	INTACT	WHITE	KITCHEN	E12	Negative	< LOD
345	6/16/2022 11:13	BASEBOARD	PLASTER	C	INTACT	WHITE	KITCHEN	E12	Negative	< LOD
346	6/16/2022 11:13	CABINET	WOOD	D	INTACT	BROWN	KITCHEN	E12	Negative	< LOD
347	6/16/2022 11:14	WALL	DRYWALL	A	INTACT	gray	dining	E12	Negative	< LOD
348	6/16/2022 11:14	WALL	DRYWALL	B	INTACT	gray	dining	E12	Negative	< LOD
349	6/16/2022 11:14	WALL	DRYWALL	C	INTACT	gray	dining	E12	Negative	< LOD
350	6/16/2022 11:15	BASEBOARD	WOOD	A	INTACT	WHITE	dining	E12	Negative	< LOD
351	6/16/2022 11:15	BASEBOARD	WOOD	B	INTACT	WHITE	dining	E12	Negative	< LOD
352	6/16/2022 11:16	BASEBOARD	WOOD	C	INTACT	WHITE	dining	E12	Negative	< LOD
353	6/16/2022 11:16	WINDOW	WOOD	C	INTACT	WHITE	dining	E12	Negative	< LOD
354	6/16/2022 11:16	WALL	DRYWALL	A	INTACT	gray	LIVING ROOM	E12	Negative	< LOD
355	6/16/2022 11:17	WALL	DRYWALL	B	INTACT	gray	LIVING ROOM	E12	Negative	< LOD
356	6/16/2022 11:17	WALL	DRYWALL	C	INTACT	gray	LIVING ROOM	E12	Negative	< LOD
357	6/16/2022 11:17	WALL	DRYWALL	D	INTACT	gray	LIVING ROOM	E12	Negative	< LOD
358	6/16/2022 11:18	TRIM	WOOD	C	INTACT	WHITE	LIVING ROOM	E12	Negative	< LOD
359	6/16/2022 11:18	BASEBOARD	WOOD	A	INTACT	WHITE	LIVING ROOM	E12	Negative	< LOD
360	6/16/2022 11:18	BASEBOARD	WOOD	B	INTACT	WHITE	LIVING ROOM	E12	Negative	< LOD
361	6/16/2022 11:19	BASEBOARD	WOOD	C	INTACT	WHITE	LIVING ROOM	E12	Negative	< LOD
362	6/16/2022 11:19	BASEBOARD	WOOD	D	INTACT	WHITE	LIVING ROOM	E12	Negative	< LOD
363	6/16/2022 11:20	WALL	DRYWALL	A	INTACT	gray	BEDROOM	E12	Negative	< LOD

Reading No	Time	Component	Substrate	Side	Condition	Color	Room	Unit	Results	Pb
364	6/16/2022 11:21	WALL	DRYWALL	B	INTACT	gray	BEDROOM	E12	Negative	< LOD
365	6/16/2022 11:21	WALL	DRYWALL	C	INTACT	gray	BEDROOM	E12	Negative	< LOD
366	6/16/2022 11:21	WALL	DRYWALL	D	INTACT	gray	BEDROOM	E12	Negative	< LOD
367	6/16/2022 11:21	WINDOW	WOOD	A	INTACT	WHITE	BEDROOM	E12	Negative	< LOD
368	6/16/2022 11:22	BASEBOARD	WOOD	A	INTACT	WHITE	BEDROOM	E12	Negative	< LOD
369	6/16/2022 11:22	BASEBOARD	WOOD	B	INTACT	WHITE	BEDROOM	E12	Negative	< LOD
370	6/16/2022 11:22	BASEBOARD	WOOD	C	INTACT	WHITE	BEDROOM	E12	Negative	< LOD
371	6/16/2022 11:22	BASEBOARD	WOOD	D	INTACT	WHITE	BEDROOM	E12	Negative	< LOD
372	6/16/2022 11:23	DOOR	WOOD	C	INTACT	WHITE	BEDROOM	E12	Negative	< LOD
373	6/16/2022 11:23	TRIM	WOOD	C	INTACT	WHITE	BEDROOM	E12	Negative	< LOD
374	6/16/2022 11:23	jamb	WOOD	C	INTACT	WHITE	BEDROOM	E12	Negative	< LOD
375	6/16/2022 11:23	CLOSET	WOOD	D	INTACT	WHITE	BEDROOM	E12	Negative	< LOD
376	6/16/2022 11:24	TRIM	WOOD	D	INTACT	WHITE	BEDROOM	E12	Negative	< LOD
377	6/16/2022 11:24	jamb	WOOD	D	INTACT	WHITE	BEDROOM	E12	Negative	< LOD
378	6/16/2022 11:25	WALL	DRYWALL	A	INTACT	gray	HALL	E12	Negative	< LOD
379	6/16/2022 11:25	WALL	DRYWALL	B	INTACT	gray	HALL	E12	Negative	< LOD
380	6/16/2022 11:25	WALL	DRYWALL	C	INTACT	gray	HALL	E12	Negative	< LOD
381	6/16/2022 11:26	WALL	DRYWALL	D	INTACT	gray	HALL	E12	Negative	< LOD
382	6/16/2022 11:26	CEILING	DRYWALL		INTACT	WHITE	HALL	E12	Negative	< LOD
383	6/16/2022 11:27	DOOR	WOOD	A	INTACT	WHITE	HALL	E12	Negative	< LOD
384	6/16/2022 11:27	TRIM	WOOD	A	INTACT	WHITE	HALL	E12	Negative	< LOD
385	6/16/2022 11:27	jamb	WOOD	A	INTACT	WHITE	HALL	E12	Negative	< LOD
386	6/16/2022 11:27	CLOSET	WOOD	C	INTACT	WHITE	HALL	E12	Negative	< LOD
387	6/16/2022 11:28	TRIM	WOOD	C	INTACT	WHITE	HALL	E12	Negative	< LOD
388	6/16/2022 11:28	CLOSET	WOOD	D	INTACT	WHITE	HALL	E12	Negative	< LOD
389	6/16/2022 11:28	TRIM	WOOD	D	INTACT	WHITE	HALL	E12	Negative	< LOD
390	6/16/2022 11:28	CEILING	DRYWALL		INTACT	WHITE	BEDROOM	E12	Negative	< LOD
391	6/16/2022 11:29	CEILING	DRYWALL		INTACT	gray	KITCHEN	E12	Negative	< LOD
392	6/16/2022 11:30	CEILING	DRYWALL		INTACT	WHITE	dining	E12	Negative	< LOD
393	6/16/2022 11:31	CEILING	DRYWALL		INTACT	WHITE	LIVING ROOM	E12	Negative	< LOD
394	6/16/2022 11:43	WALL	DRYWALL	A	INTACT	gray	KITCHEN	E5	Negative	< LOD
395	6/16/2022 11:44	WALL	DRYWALL	B	INTACT	gray	KITCHEN	E5	Negative	< LOD
396	6/16/2022 11:44	WALL	DRYWALL	C	INTACT	gray	KITCHEN	E5	Negative	< LOD

Reading No	Time	Component	Substrate	Side	Condition	Color	Room	Unit	Results	Pb
397	6/16/2022 11:44	WALL	DRYWALL	D	INTACT	gray	KITCHEN	E5	Negative	< LOD
398	6/16/2022 11:45	BASEBOARD	WOOD	A	INTACT	WHITE	KITCHEN	E5	Negative	< LOD
399	6/16/2022 11:45	BASEBOARD	WOOD	C	INTACT	WHITE	KITCHEN	E5	Negative	< LOD
400	6/16/2022 11:45	CABINET	WOOD	B	INTACT	BROWN	KITCHEN	E5	Negative	< LOD
401	6/16/2022 11:46	WALL	DRYWALL	A	INTACT	gray	dining	E5	Negative	< LOD
402	6/16/2022 11:46	WALL	DRYWALL	C	INTACT	gray	dining	E5	Negative	< LOD
403	6/16/2022 11:46	WALL	DRYWALL	D	INTACT	gray	dining	E5	Negative	< LOD
404	6/16/2022 11:46	BASEBOARD	WOOD	A	INTACT	gray	dining	E5	Negative	< LOD
405	6/16/2022 11:47	BASEBOARD	WOOD	C	INTACT	gray	dining	E5	Negative	< LOD
406	6/16/2022 11:47	BASEBOARD	WOOD	D	INTACT	gray	dining	E5	Negative	< LOD
407	6/16/2022 11:47	WINDOW	WOOD	C	INTACT	WHITE	dining	E5	Negative	< LOD
408	6/16/2022 11:48	WALL	DRYWALL	A	INTACT	gray	living	E5	Negative	< LOD
409	6/16/2022 11:48	WALL	DRYWALL	B	INTACT	gray	living	E5	Null	< LOD
410	6/16/2022 11:48	WALL	DRYWALL	B	INTACT	gray	living	E5	Negative	< LOD
411	6/16/2022 11:48	WALL	DRYWALL	C	INTACT	gray	living	E5	Negative	< LOD
412	6/16/2022 11:49	WALL	DRYWALL	D	INTACT	gray	living	E5	Negative	< LOD
413	6/16/2022 11:49	BASEBOARD	WOOD	A	INTACT	WHITE	living	E5	Negative	< LOD
414	6/16/2022 11:49	BASEBOARD	WOOD	B	INTACT	WHITE	living	E5	Negative	< LOD
415	6/16/2022 11:50	BASEBOARD	WOOD	C	INTACT	WHITE	living	E5	Negative	< LOD
416	6/16/2022 11:50	BASEBOARD	WOOD	D	INTACT	WHITE	living	E5	Negative	< LOD
417	6/16/2022 11:50	TRIM	WOOD	C	INTACT	WHITE	living	E5	Negative	< LOD
418	6/16/2022 11:51	WALL	DRYWALL	A	INTACT	gray	BATHROOM	E5	Negative	< LOD
419	6/16/2022 11:51	WALL	DRYWALL	B	INTACT	gray	BATHROOM	E5	Null	< LOD
420	6/16/2022 11:51	WALL	DRYWALL	B	INTACT	gray	BATHROOM	E5	Null	< LOD
421	6/16/2022 11:51	WALL	DRYWALL	B	INTACT	gray	BATHROOM	E5	Negative	< LOD
422	6/16/2022 11:51	WALL	DRYWALL	C	INTACT	gray	BATHROOM	E5	Negative	< LOD
423	6/16/2022 11:52	WALL	DRYWALL	D	INTACT	gray	BATHROOM	E5	Negative	< LOD
424	6/16/2022 11:52	CEILING	DRYWALL		INTACT	gray	BATHROOM	E5	Negative	< LOD
425	6/16/2022 11:52	DOOR	WOOD	A	INTACT	WHITE	BATHROOM	E5	Negative	< LOD
426	6/16/2022 11:52	TRIM	WOOD	A	INTACT	WHITE	BATHROOM	E5	Negative	< LOD
427	6/16/2022 11:53	jamb	WOOD	A	INTACT	WHITE	BATHROOM	E5	Negative	< LOD
428	6/16/2022 11:53	CABINET	WOOD	C	INTACT	BROWN	BATHROOM	E5	Negative	< LOD
429	6/16/2022 11:54	WALL	DRYWALL	A	INTACT	gray	BEDROOM	E5	Negative	< LOD

Reading No	Time	Component	Substrate	Side	Condition	Color	Room	Unit	Results	Pb
430	6/16/2022 11:54	WALL	DRYWALL	B	INTACT	gray	BEDROOM	E5	Negative	< LOD
431	6/16/2022 11:54	WALL	DRYWALL	C	INTACT	gray	BEDROOM	E5	Negative	< LOD
432	6/16/2022 11:55	WALL	DRYWALL	D	INTACT	gray	BEDROOM	E5	Negative	< LOD
433	6/16/2022 11:55	WINDOW	WOOD	A	INTACT	WHITE	BEDROOM	E5	Negative	< LOD
434	6/16/2022 11:55	CLOSET	WOOD	B	INTACT	WHITE	BEDROOM	E5	Negative	< LOD
435	6/16/2022 11:55	TRIM	WOOD	B	INTACT	WHITE	BEDROOM	E5	Negative	< LOD
436	6/16/2022 11:56	jamb	WOOD	B	INTACT	WHITE	BEDROOM	E5	Negative	< LOD
437	6/16/2022 11:56	BASEBOARD	WOOD	A	INTACT	WHITE	BEDROOM	E5	Negative	< LOD
438	6/16/2022 11:56	BASEBOARD	WOOD	B	INTACT	WHITE	BEDROOM	E5	Negative	< LOD
439	6/16/2022 11:56	BASEBOARD	WOOD	C	INTACT	WHITE	BEDROOM	E5	Negative	< LOD
440	6/16/2022 11:57	BASEBOARD	WOOD	D	INTACT	WHITE	BEDROOM	E5	Negative	< LOD
441	6/16/2022 11:57	DOOR	WOOD	C	INTACT	WHITE	BEDROOM	E5	Negative	< LOD
442	6/16/2022 11:57	TRIM	WOOD	C	INTACT	WHITE	BEDROOM	E5	Negative	< LOD
443	6/16/2022 11:57	jamb	WOOD	C	INTACT	WHITE	BEDROOM	E5	Negative	< LOD
444	6/16/2022 11:58	BASEBOARD	WOOD	A	INTACT	WHITE	BATHROOM	E5	Negative	< LOD
445	6/16/2022 11:58	BASEBOARD	WOOD	C	INTACT	WHITE	BATHROOM	E5	Negative	< LOD
446	6/16/2022 11:58	BASEBOARD	WOOD	D	INTACT	WHITE	BATHROOM	E5	Negative	< LOD
447	6/16/2022 11:59	WALL	DRYWALL	A	INTACT	gray	HALL	E5	Negative	< LOD
448	6/16/2022 11:59	WALL	DRYWALL	B	INTACT	gray	HALL	E5	Negative	< LOD
449	6/16/2022 11:59	WALL	DRYWALL	C	INTACT	gray	HALL	E5	Null	< LOD
450	6/16/2022 11:59	WALL	DRYWALL	C	INTACT	gray	HALL	E5	Negative	< LOD
451	6/16/2022 12:00	WALL	DRYWALL	D	INTACT	gray	HALL	E5	Negative	< LOD
452	6/16/2022 12:00	CEILING	DRYWALL		INTACT	WHITE	HALL	E5	Negative	< LOD
453	6/16/2022 12:00	DOOR	WOOD	A	INTACT	WHITE	HALL	E5	Negative	< LOD
454	6/16/2022 12:01	TRIM	WOOD	A	INTACT	WHITE	HALL	E5	Negative	< LOD
455	6/16/2022 12:01	jamb	WOOD	A	INTACT	WHITE	HALL	E5	Negative	< LOD
456	6/16/2022 12:01	CLOSET	WOOD	B	INTACT	WHITE	HALL	E5	Negative	< LOD
457	6/16/2022 12:01	TRIM	WOOD	B	INTACT	WHITE	HALL	E5	Negative	< LOD
458	6/16/2022 12:02	CEILING	DRYWALL		INTACT	WHITE	BEDROOM	E5	Null	< LOD
459	6/16/2022 12:03	CEILING	DRYWALL		INTACT	WHITE	BEDROOM	E5	Negative	< LOD
460	6/16/2022 12:03	CEILING	DRYWALL		INTACT	gray	KITCHEN	E5	Negative	< LOD
461	6/16/2022 12:04	CEILING	DRYWALL		INTACT	WHITE	dining	E5	Negative	< LOD
462	6/16/2022 12:05	CEILING	DRYWALL		INTACT	WHITE	LIVING ROOM	E5	Negative	< LOD

Reading No	Time	Component	Substrate	Side	Condition	Color	Room	Unit	Results	Pb
463	6/16/2022 12:15	nist				RED			Negative	0.8
464	6/16/2022 12:15	nist				RED			Negative	0.8
465	6/16/2022 12:15	nist				RED			Negative	0.8
466	6/16/2022 13:19									< LOD
467	6/16/2022 13:30									9.6
468	6/16/2022 13:31	nist				RED			Positive	1
469	6/16/2022 13:31	nist				RED			Positive	1.1
470	6/16/2022 13:31	nist				RED			Negative	0.7
471	6/16/2022 13:41	WALL	DRYWALL	A	INTACT	gray	KITCHEN	F8	Negative	< LOD
472	6/16/2022 13:41	WALL	DRYWALL	B	INTACT	gray	KITCHEN	F8	Negative	< LOD
473	6/16/2022 13:41	WALL	DRYWALL	C	INTACT	gray	KITCHEN	F8	Negative	< LOD
474	6/16/2022 13:41	WALL	DRYWALL	D	INTACT	gray	KITCHEN	F8	Negative	< LOD
475	6/16/2022 13:42	CEILING	DRYWALL		INTACT	gray	KITCHEN	F8	Negative	< LOD
476	6/16/2022 13:42	BASEBOARD	WOOD	A	INTACT	WHITE	KITCHEN	F8	Negative	< LOD
477	6/16/2022 13:42	BASEBOARD	WOOD	C	INTACT	WHITE	KITCHEN	F8	Negative	< LOD
478	6/16/2022 13:43	CABINET	WOOD	D	INTACT	BROWN	KITCHEN	F8	Negative	< LOD
479	6/16/2022 13:43	WALL	DRYWALL	A	INTACT	gray	dining	F8	Negative	< LOD
480	6/16/2022 13:43	WALL	DRYWALL	B	INTACT	gray	dining	F8	Negative	< LOD
481	6/16/2022 13:44	WALL	DRYWALL	C	INTACT	gray	dining	F8	Negative	< LOD
482	6/16/2022 13:44	WALL	DRYWALL	D	INTACT	gray	dining	F8	Negative	< LOD
483	6/16/2022 13:44	CEILING	DRYWALL		INTACT	WHITE	dining	F8	Negative	< LOD
484	6/16/2022 13:45	BASEBOARD	WOOD	A	INTACT	WHITE	dining	F8	Negative	< LOD
485	6/16/2022 13:45	BASEBOARD	WOOD	B	INTACT	WHITE	dining	F8	Negative	< LOD
486	6/16/2022 13:45	BASEBOARD	WOOD	C	INTACT	WHITE	dining	F8	Negative	< LOD
487	6/16/2022 13:45	BASEBOARD	WOOD	D	INTACT	WHITE	dining	F8	Null	< LOD
488	6/16/2022 13:45	BASEBOARD	WOOD	D	INTACT	WHITE	dining	F8	Negative	< LOD
489	6/16/2022 13:46	WINDOW	WOOD	C	INTACT	WHITE	dining	F8	Negative	< LOD
490	6/16/2022 13:46	WALL	DRYWALL	A	INTACT	gray	LIVING ROOM	F8	Negative	< LOD
491	6/16/2022 13:47	WALL	DRYWALL	B	INTACT	gray	LIVING ROOM	F8	Null	< LOD
492	6/16/2022 13:47	WALL	DRYWALL	B	INTACT	gray	LIVING ROOM	F8	Negative	< LOD
493	6/16/2022 13:47	WALL	DRYWALL	C	INTACT	gray	LIVING ROOM	F8	Null	< LOD
494	6/16/2022 13:47	WALL	DRYWALL	C	INTACT	gray	LIVING ROOM	F8	Negative	< LOD
495	6/16/2022 13:47	WALL	DRYWALL	D	INTACT	gray	LIVING ROOM	F8	Negative	< LOD

Reading No	Time	Component	Substrate	Side	Condition	Color	Room	Unit	Results	Pb
496	6/16/2022 13:48	BASEBOARD	WOOD	A	INTACT	WHITE	LIVING ROOM	F8	Negative	< LOD
497	6/16/2022 13:48	BASEBOARD	WOOD	B	INTACT	WHITE	LIVING ROOM	F8	Negative	< LOD
498	6/16/2022 13:48	BASEBOARD	WOOD	C	INTACT	WHITE	LIVING ROOM	F8	Negative	< LOD
499	6/16/2022 13:49	BASEBOARD	WOOD	D	INTACT	WHITE	LIVING ROOM	F8	Negative	< LOD
500	6/16/2022 13:50	TRIM	WOOD	C	INTACT	WHITE	LIVING ROOM	F8	Negative	< LOD
501	6/16/2022 13:51	CEILING	DRYWALL		INTACT	WHITE	LIVING ROOM	F8	Negative	< LOD
502	6/16/2022 13:52	WALL	DRYWALL	A	INTACT	gray	HALL	F8	Negative	< LOD
503	6/16/2022 13:52	WALL	DRYWALL	B	INTACT	gray	HALL	F8	Negative	< LOD
504	6/16/2022 13:52	WALL	DRYWALL	C	INTACT	gray	HALL	F8	Negative	< LOD
505	6/16/2022 13:52	WALL	DRYWALL	D	INTACT	gray	HALL	F8	Negative	< LOD
506	6/16/2022 13:53	CEILING	DRYWALL		INTACT	WHITE	HALL	F8	Negative	< LOD
507	6/16/2022 13:53	BASEBOARD	WOOD	A	INTACT	WHITE	HALL	F8	Negative	< LOD
508	6/16/2022 13:53	BASEBOARD	WOOD	B	INTACT	WHITE	HALL	F8	Negative	< LOD
509	6/16/2022 13:54	BASEBOARD	WOOD	C	INTACT	WHITE	HALL	F8	Negative	< LOD
510	6/16/2022 13:54	DOOR	WOOD	A	INTACT	WHITE	HALL	F8	Negative	< LOD
511	6/16/2022 13:54	TRIM	WOOD	A	INTACT	WHITE	HALL	F8	Negative	< LOD
512	6/16/2022 13:54	CLOSET	WOOD	C	INTACT	WHITE	HALL	F8	Negative	< LOD
513	6/16/2022 13:55	TRIM	WOOD	C	INTACT	WHITE	HALL	F8	Negative	< LOD
514	6/16/2022 13:55	jamb	WOOD	C	INTACT	WHITE	HALL	F8	Negative	< LOD
515	6/16/2022 13:55	CLOSET	WOOD	D	INTACT	WHITE	HALL	F8	Negative	< LOD
516	6/16/2022 13:56	WALL	DRYWALL	A	INTACT	gray	BATHROOM	F8	Negative	< LOD
517	6/16/2022 13:56	WALL	DRYWALL	B	INTACT	gray	BATHROOM	F8	Negative	< LOD
518	6/16/2022 13:56	WALL	DRYWALL	C	INTACT	gray	BATHROOM	F8	Negative	< LOD
519	6/16/2022 13:56	WALL	DRYWALL	D	INTACT	gray	BATHROOM	F8	Negative	< LOD
520	6/16/2022 13:57	CEILING	DRYWALL		INTACT	gray	BATHROOM	F8	Negative	< LOD
521	6/16/2022 13:57	DOOR	WOOD	A	INTACT	WHITE	BATHROOM	F8	Negative	< LOD
522	6/16/2022 13:57	TRIM	WOOD	A	INTACT	WHITE	BATHROOM	F8	Negative	< LOD
523	6/16/2022 13:57	jamb	WOOD	A	INTACT	WHITE	BATHROOM	F8	Negative	< LOD
524	6/16/2022 13:58	CABINET	WOOD	D	INTACT	BROWN	BATHROOM	F8	Null	< LOD
525	6/16/2022 13:58	CABINET	WOOD	D	INTACT	BROWN	BATHROOM	F8	Negative	< LOD
526	6/16/2022 13:58	BASEBOARD	WOOD	A	INTACT	WHITE	BATHROOM	F8	Negative	< LOD
527	6/16/2022 13:58	BASEBOARD	WOOD	B	INTACT	WHITE	BATHROOM	F8	Negative	< LOD
528	6/16/2022 13:59	BASEBOARD	WOOD	C	INTACT	WHITE	BATHROOM	F8	Negative	< LOD

Reading No	Time	Component	Substrate	Side	Condition	Color	Room	Unit	Results	Pb
529	6/16/2022 13:59	BASEBOARD	WOOD	D	INTACT	WHITE	BATHROOM	F8	Negative	< LOD
530	6/16/2022 14:00	WALL	DRYWALL	A	INTACT	gray	e bed	F8	Negative	< LOD
531	6/16/2022 14:00	WALL	DRYWALL	B	INTACT	gray	e bed	F8	Negative	< LOD
532	6/16/2022 14:00	WALL	DRYWALL	C	INTACT	gray	e bed	F8	Negative	< LOD
533	6/16/2022 14:01	WALL	DRYWALL	D	INTACT	gray	e bed	F8	Negative	< LOD
534	6/16/2022 14:01	BASEBOARD	WOOD	A	INTACT	WHITE	e bed	F8	Negative	< LOD
535	6/16/2022 14:01	WINDOW	WOOD	A	INTACT	WHITE	e bed	F8	Negative	< LOD
536	6/16/2022 14:02	BASEBOARD	WOOD	B	INTACT	WHITE	e bed	F8	Negative	< LOD
537	6/16/2022 14:02	BASEBOARD	WOOD	C	INTACT	WHITE	e bed	F8	Negative	< LOD
538	6/16/2022 14:02	BASEBOARD	WOOD	D	INTACT	WHITE	e bed	F8	Negative	< LOD
539	6/16/2022 14:03	DOOR	WOOD	C	INTACT	WHITE	e bed	F8	Negative	< LOD
540	6/16/2022 14:03	TRIM	WOOD	C	INTACT	WHITE	e bed	F8	Negative	< LOD
541	6/16/2022 14:03	jamb	WOOD	C	INTACT	WHITE	e bed	F8	Negative	< LOD
542	6/16/2022 14:03	CLOSET	WOOD	C	INTACT	WHITE	e bed	F8	Negative	< LOD
543	6/16/2022 14:03	TRIM	WOOD	C	INTACT	WHITE	e bed	F8	Negative	< LOD
544	6/16/2022 14:04	jamb	WOOD	C	INTACT	WHITE	e bed	F8	Negative	< LOD
545	6/16/2022 14:04	WALL	DRYWALL	A	INTACT	gray	w bed	F8	Negative	< LOD
546	6/16/2022 14:05	WALL	DRYWALL	B	INTACT	gray	w bed	F8	Negative	< LOD
547	6/16/2022 14:05	WALL	DRYWALL	C	INTACT	gray	w bed	F8	Negative	< LOD
548	6/16/2022 14:05	WALL	DRYWALL	D	INTACT	gray	w bed	F8	Negative	< LOD
549	6/16/2022 14:05	WALL	DRYWALL	D	INTACT	gray	w bed	F8	Negative	< LOD
550	6/16/2022 14:06	CEILING	DRYWALL		INTACT	WHITE	w bed	F8	Negative	< LOD
551	6/16/2022 14:07	WINDOW	WOOD	A	INTACT	WHITE	w bed	F8	Negative	< LOD
552	6/16/2022 14:07	BASEBOARD	WOOD	A	INTACT	WHITE	w bed	F8	Negative	< LOD
553	6/16/2022 14:07	BASEBOARD	WOOD	B	INTACT	WHITE	w bed	F8	Negative	< LOD
554	6/16/2022 14:07	BASEBOARD	WOOD	C	INTACT	WHITE	w bed	F8	Negative	< LOD
555	6/16/2022 14:07	BASEBOARD	WOOD	D	INTACT	WHITE	w bed	F8	Negative	< LOD
556	6/16/2022 14:08	DOOR	WOOD	C	INTACT	WHITE	w bed	F8	Negative	< LOD
557	6/16/2022 14:08	TRIM	WOOD	C	INTACT	WHITE	w bed	F8	Negative	< LOD
558	6/16/2022 14:08	jamb	WOOD	C	INTACT	WHITE	w bed	F8	Negative	< LOD
559	6/16/2022 14:09	jamb	WOOD	A	INTACT	WHITE	HALL	F8	Negative	< LOD
560	6/16/2022 14:14	WALL	DRYWALL	A	INTACT	gray	KITCHEN	F6	Negative	< LOD
561	6/16/2022 14:14	WALL	DRYWALL	B	INTACT	gray	KITCHEN	F6	Negative	< LOD

Reading No	Time	Component	Substrate	Side	Condition	Color	Room	Unit	Results	Pb
562	6/16/2022 14:14	WALL	DRYWALL	C	INTACT	gray	KITCHEN	F6	Negative	< LOD
563	6/16/2022 14:14	WALL	DRYWALL	D	INTACT	gray	KITCHEN	F6	Negative	< LOD
564	6/16/2022 14:15	CEILING	DRYWALL		INTACT	gray	KITCHEN	F6	Negative	< LOD
565	6/16/2022 14:16	BASEBOARD	WOOD	A	INTACT	WHITE	KITCHEN	F6	Negative	< LOD
566	6/16/2022 14:16	BASEBOARD	WOOD	C	INTACT	WHITE	KITCHEN	F6	Negative	< LOD
567	6/16/2022 14:16	CABINET	WOOD	B	INTACT	BROWN	KITCHEN	F6	Negative	< LOD
568	6/16/2022 14:17	WALL	DRYWALL	A	INTACT	gray	dining	F6	Negative	< LOD
569	6/16/2022 14:18	WALL	DRYWALL	B	INTACT	gray	dining	F6	Negative	< LOD
570	6/16/2022 14:18	WALL	DRYWALL	C	INTACT	gray	dining	F6	Negative	< LOD
571	6/16/2022 14:18	WALL	DRYWALL	D	INTACT	gray	dining	F6	Negative	< LOD
572	6/16/2022 14:23	CEILING	DRYWALL		INTACT	WHITE	dining	F6	Negative	< LOD
573	6/16/2022 14:23	BASEBOARD	WOOD	A	INTACT	WHITE	dining	F6	Negative	< LOD
574	6/16/2022 14:23	BASEBOARD	WOOD	B	INTACT	WHITE	dining	F6	Negative	< LOD
575	6/16/2022 14:24	BASEBOARD	WOOD	C	INTACT	WHITE	dining	F6	Negative	< LOD
576	6/16/2022 14:24	BASEBOARD	WOOD	D	INTACT	WHITE	dining	F6	Negative	< LOD
577	6/16/2022 14:24	WINDOW	WOOD	C	INTACT	WHITE	dining	F6	Negative	< LOD
578	6/16/2022 14:25	WALL	DRYWALL	A	INTACT	gray	LIVING ROOM	F6	Negative	< LOD
579	6/16/2022 14:25	WALL	DRYWALL	B	INTACT	gray	LIVING ROOM	F6	Negative	< LOD
580	6/16/2022 14:25	WALL	DRYWALL	C	INTACT	gray	LIVING ROOM	F6	Negative	< LOD
581	6/16/2022 14:26	WALL	DRYWALL	D	INTACT	gray	LIVING ROOM	F6	Negative	< LOD
582	6/16/2022 14:26	CEILING	DRYWALL		INTACT	WHITE	LIVING ROOM	F6	Negative	< LOD
583	6/16/2022 14:26	TRIM	WOOD	C	INTACT	WHITE	LIVING ROOM	F6	Negative	< LOD
584	6/16/2022 14:27	BASEBOARD	WOOD	A	INTACT	WHITE	LIVING ROOM	F6	Negative	< LOD
585	6/16/2022 14:27	BASEBOARD	WOOD	B	INTACT	WHITE	LIVING ROOM	F6	Negative	< LOD
586	6/16/2022 14:27	BASEBOARD	WOOD	C	INTACT	WHITE	LIVING ROOM	F6	Negative	< LOD
587	6/16/2022 14:27	BASEBOARD	WOOD	D	INTACT	WHITE	LIVING ROOM	F6	Negative	< LOD
588	6/16/2022 14:29	WALL	DRYWALL	A	INTACT	gray	e bed	F6	Negative	< LOD
589	6/16/2022 14:29	WALL	DRYWALL	B	INTACT	gray	e bed	F6	Negative	< LOD
590	6/16/2022 14:30	WALL	DRYWALL	C	INTACT	gray	e bed	F6	Negative	< LOD
591	6/16/2022 14:30	WALL	DRYWALL	C	INTACT	gray	e bed	F6	Negative	< LOD
592	6/16/2022 14:30	WALL	DRYWALL	D	INTACT	gray	e bed	F6	Negative	< LOD
593	6/16/2022 14:31	WINDOW	WOOD	A	INTACT	WHITE	e bed	F6	Negative	< LOD
594	6/16/2022 14:33	BASEBOARD	WOOD	B	INTACT	WHITE	e bed	F6	Negative	< LOD

Reading No	Time	Component	Substrate	Side	Condition	Color	Room	Unit	Results	Pb
595	6/16/2022 14:35	BASEBOARD	WOOD	B	INTACT	WHITE	e bed	F6	Negative	< LOD
596	6/16/2022 14:35	DOOR	WOOD	C	INTACT	WHITE	e bed	F6	Negative	< LOD
597	6/16/2022 14:35	TRIM	WOOD	C	INTACT	WHITE	e bed	F6	Negative	< LOD
598	6/16/2022 14:36	jamb	WOOD	C	INTACT	WHITE	e bed	F6	Negative	< LOD
599	6/16/2022 14:36	WALL	DRYWALL	A	INTACT	gray	w bed	F6	Negative	< LOD
600	6/16/2022 14:37	WALL	DRYWALL	B	INTACT	gray	w bed	F6	Negative	< LOD
601	6/16/2022 14:37	WALL	DRYWALL	C	INTACT	gray	w bed	F6	Negative	< LOD
602	6/16/2022 14:37	WALL	DRYWALL	D	INTACT	gray	w bed	F6	Negative	< LOD
603	6/16/2022 14:37	WINDOW	WOOD	A	INTACT	WHITE	w bed	F6	Negative	< LOD
604	6/16/2022 14:37	BASEBOARD	WOOD	B	INTACT	WHITE	w bed	F6	Negative	< LOD
605	6/16/2022 14:38	CLOSET	WOOD	C	INTACT	WHITE	w bed	F6	Negative	< LOD
606	6/16/2022 14:38	TRIM	WOOD	C	INTACT	WHITE	w bed	F6	Negative	< LOD
607	6/16/2022 14:38	jamb	WOOD	C	INTACT	WHITE	w bed	F6	Negative	< LOD
608	6/16/2022 14:39	DOOR	WOOD	C	INTACT	WHITE	w bed	F6	Negative	< LOD
609	6/16/2022 14:39	CEILING	WOOD		INTACT	WHITE	w bed	F6	Negative	< LOD
610	6/16/2022 14:40	WALL	DRYWALL	A	INTACT	gray	BATHROOM	F6	Negative	< LOD
611	6/16/2022 14:40	WALL	DRYWALL	B	INTACT	gray	BATHROOM	F6	Negative	< LOD
612	6/16/2022 14:40	WALL	DRYWALL	C	INTACT	gray	BATHROOM	F6	Negative	< LOD
613	6/16/2022 14:40	WALL	DRYWALL	D	INTACT	gray	BATHROOM	F6	Negative	< LOD
614	6/16/2022 14:41	CEILING	DRYWALL		INTACT	gray	BATHROOM	F6	Negative	< LOD
615	6/16/2022 14:41	DOOR	WOOD	A	INTACT	WHITE	BATHROOM	F6	Negative	< LOD
616	6/16/2022 14:41	TRIM	WOOD	A	INTACT	WHITE	BATHROOM	F6	Negative	< LOD
617	6/16/2022 14:41	jamb	WOOD	A	INTACT	WHITE	BATHROOM	F6	Negative	< LOD
618	6/16/2022 14:42	CABINET	WOOD	B	INTACT	BROWN	BATHROOM	F6	Negative	< LOD
619	6/16/2022 14:42	WALL	DRYWALL	A	INTACT	gray	HALL	F6	Negative	< LOD
620	6/16/2022 14:43	WALL	DRYWALL	B	INTACT	gray	HALL	F6	Null	< LOD
621	6/16/2022 14:43	WALL	DRYWALL	B	INTACT	gray	HALL	F6	Negative	< LOD
622	6/16/2022 14:43	WALL	DRYWALL	C	INTACT	gray	HALL	F6	Negative	< LOD
623	6/16/2022 14:43	WALL	DRYWALL	D	INTACT	gray	HALL	F6	Negative	< LOD
624	6/16/2022 14:44	CEILING	DRYWALL		INTACT	WHITE	HALL	F6	Negative	< LOD
625	6/16/2022 14:44	DOOR	WOOD	A	INTACT	WHITE	HALL	F6	Negative	< LOD
626	6/16/2022 14:44	TRIM	WOOD	A	INTACT	WHITE	HALL	F6	Negative	< LOD
627	6/16/2022 14:45	jamb	WOOD	A	INTACT	WHITE	HALL	F6	Negative	< LOD

Reading No	Time	Component	Substrate	Side	Condition	Color	Room	Unit	Results	Pb
628	6/16/2022 14:45	CLOSET	WOOD	B	INTACT	WHITE	HALL	F6	Negative	< LOD
629	6/16/2022 14:46	soffit	WOOD	C	INTACT	YELLOW	OUTSIDE	F6	Negative	< LOD
630	6/16/2022 14:47	fascia	WOOD	C	INTACT	BROWN	OUTSIDE	F6	Negative	< LOD
631	6/16/2022 14:49	stringerrr	WOOD	A	INTACT	YELLOW	OUTSIDE	F6	Negative	< LOD
632	6/16/2022 14:53	WALL	DRYWALL	A	INTACT	gray	HALL	F5	Negative	< LOD
633	6/16/2022 14:53	WALL	DRYWALL	B	INTACT	gray	HALL	F5	Null	< LOD
634	6/16/2022 14:53	WALL	DRYWALL	B	INTACT	gray	HALL	F5	Negative	< LOD
635	6/16/2022 14:54	WALL	DRYWALL	C	INTACT	gray	HALL	F5	Negative	< LOD
636	6/16/2022 14:54	CEILING	DRYWALL		INTACT	WHITE	HALL	F5	Negative	< LOD
637	6/16/2022 14:54	WALL	DRYWALL	C	INTACT	gray	HALL	F5	Negative	< LOD
638	6/16/2022 14:55	WALL	DRYWALL	D	INTACT	gray	HALL	F5	Negative	< LOD
639	6/16/2022 14:55	DOOR	WOOD	A	INTACT	WHITE	HALL	F5	Negative	< LOD
640	6/16/2022 14:55	TRIM	WOOD	A	INTACT	WHITE	HALL	F5	Negative	< LOD
641	6/16/2022 14:56	CLOSET	WOOD	B	INTACT	WHITE	HALL	F5	Negative	< LOD
642	6/16/2022 14:56	WALL	DRYWALL	A	INTACT	gray	LIVING ROOM	F5	Negative	< LOD
643	6/16/2022 14:57	WALL	DRYWALL	B	INTACT	gray	LIVING ROOM	F5	Negative	< LOD
644	6/16/2022 14:57	WALL	DRYWALL	C	INTACT	gray	LIVING ROOM	F5	Negative	< LOD
645	6/16/2022 14:57	WALL	DRYWALL	D	INTACT	gray	LIVING ROOM	F5	Negative	< LOD
646	6/16/2022 14:58	CEILING	DRYWALL		INTACT	WHITE	LIVING ROOM	F5	Negative	< LOD
647	6/16/2022 14:58	TRIM	WOOD	C	INTACT	WHITE	LIVING ROOM	F5	Negative	< LOD
648	6/16/2022 14:58	BASEBOARD	WOOD	D	INTACT	WHITE	LIVING ROOM	F5	Negative	< LOD
649	6/16/2022 14:59	WALL	DRYWALL	A	INTACT	gray	dining	F5	Negative	< LOD
650	6/16/2022 14:59	WALL	DRYWALL	B	INTACT	gray	dining	F5	Negative	< LOD
651	6/16/2022 14:59	WALL	DRYWALL	C	INTACT	gray	dining	F5	Negative	< LOD
652	6/16/2022 15:00	WALL	DRYWALL	D	INTACT	gray	dining	F5	Negative	< LOD
653	6/16/2022 15:00	WINDOW	WOOD	C	INTACT	WHITE	dining	F5	Negative	< LOD
654	6/16/2022 15:00	BASEBOARD	WOOD	A	INTACT	WHITE	dining	F5	Negative	< LOD
655	6/16/2022 15:01	CEILING	DRYWALL		INTACT	WHITE	dining	F5	Negative	< LOD
656	6/16/2022 15:01	WALL	DRYWALL	A	INTACT	GRAY	KITCHEN	F5	Negative	< LOD
657	6/16/2022 15:01	WALL	DRYWALL	B	INTACT	GRAY	KITCHEN	F5	Negative	< LOD
658	6/16/2022 15:02	WALL	DRYWALL	C	INTACT	GRAY	KITCHEN	F5	Negative	< LOD
659	6/16/2022 15:02	WALL	DRYWALL	D	INTACT	GRAY	KITCHEN	F5	Negative	< LOD
660	6/16/2022 15:02	BASEBOARD	WOOD	A	INTACT	WHITE	KITCHEN	F5	Negative	< LOD

Reading No	Time	Component	Substrate	Side	Condition	Color	Room	Unit	Results	Pb
661	6/16/2022 15:03	CABINET	WOOD	B	INTACT	BROWN	KITCHEN	F5	Negative	< LOD
662	6/16/2022 15:03	CEILING	DRYWALL		INTACT	GRAY	KITCHEN	F5	Negative	< LOD
663	6/16/2022 15:04	BASEBOARD	WOOD	A	INTACT	WHITE	HALL	F5	Negative	< LOD
664	6/16/2022 15:05	WALL	DRYWALL	A	INTACT	GRAY	E BED	F5	Negative	< LOD
665	6/16/2022 15:05	WALL	DRYWALL	B	INTACT	GRAY	E BED	F5	Negative	< LOD
666	6/16/2022 15:05	WALL	DRYWALL	C	INTACT	GRAY	E BED	F5	Negative	< LOD
667	6/16/2022 15:06	WALL	DRYWALL	D	INTACT	GRAY	E BED	F5	Negative	< LOD
668	6/16/2022 15:06	CEILING	DRYWALL		INTACT	WHITE	E BED	F5	Negative	< LOD
669	6/16/2022 15:07	WINDOW	WOOD	A	INTACT	WHITE	E BED	F5	Negative	< LOD
670	6/16/2022 15:07	DOOR	WOOD	C	INTACT	WHITE	E BED	F5	Negative	< LOD
671	6/16/2022 15:07	TRIM	WOOD	C	INTACT	WHITE	E BED	F5	Negative	< LOD
672	6/16/2022 15:07	JAMB	WOOD	C	INTACT	WHITE	E BED	F5	Negative	< LOD
673	6/16/2022 15:08	WALL	DRYWALL	A	INTACT	GRAY	BATHROOM	F5	Negative	< LOD
674	6/16/2022 15:08	WALL	DRYWALL	B	INTACT	GRAY	BATHROOM	F5	Negative	< LOD
675	6/16/2022 15:08	WALL	DRYWALL	C	INTACT	GRAY	BATHROOM	F5	Negative	< LOD
676	6/16/2022 15:09	WALL	DRYWALL	D	INTACT	GRAY	BATHROOM	F5	Negative	< LOD
677	6/16/2022 15:09	CEILING	DRYWALL		INTACT	GRAY	BATHROOM	F5	Negative	< LOD
678	6/16/2022 15:09	DOOR	WOOD	A	INTACT	WHITE	BATHROOM	F5	Negative	< LOD
679	6/16/2022 15:10	TRIM	WOOD	A	INTACT	WHITE	BATHROOM	F5	Null	< LOD
680	6/16/2022 15:10	TRIM	WOOD	A	INTACT	WHITE	BATHROOM	F5	Negative	< LOD
681	6/16/2022 15:10	JAMB	WOOD	A	INTACT	WHITE	BATHROOM	F5	Negative	< LOD
682	6/16/2022 15:10	BASEBOARD	WOOD	A	INTACT	WHITE	BATHROOM	F5	Negative	< LOD
683	6/16/2022 15:10	CABINET	WOOD	B	INTACT	BROWN	BATHROOM	F5	Negative	< LOD
684	6/16/2022 15:12	WALL	DRYWALL	A	INTACT	GRAY	W BED	F5	Negative	< LOD
685	6/16/2022 15:12	WALL	DRYWALL	B	INTACT	GRAY	W BED	F5	Negative	< LOD
686	6/16/2022 15:13	WALL	DRYWALL	C	INTACT	GRAY	W BED	F5	Negative	< LOD
687	6/16/2022 15:13	WALL	DRYWALL	D	INTACT	GRAY	W BED	F5	Negative	< LOD
688	6/16/2022 15:14	WINDOW	WOOD	A	INTACT	WHITE	W BED	F5	Negative	< LOD
689	6/16/2022 15:14	BASEBOARD	WOOD	D	INTACT	WHITE	W BED	F5	Negative	< LOD
690	6/16/2022 15:14	DOOR	WOOD	C	INTACT	WHITE	W BED	F5	Negative	< LOD
691	6/16/2022 15:14	TRIM	WOOD	C	INTACT	WHITE	W BED	F5	Negative	< LOD
692	6/16/2022 15:15	JAMB	WOOD	C	INTACT	WHITE	W BED	F5	Negative	< LOD
693	6/16/2022 15:15	CEILING	DRYWALL		INTACT	WHITE	W BED	F5	Null	< LOD

Reading No	Time	Component	Substrate	Side	Condition	Color	Room	Unit	Results	Pb
694	6/16/2022 15:15	CEILING	DRYWALL		INTACT	WHITE	W BED	F5	Negative	< LOD
695	6/16/2022 15:21	NIST			INTACT	RED			Negative	0.9
696	6/16/2022 15:22	NIST			INTACT	RED			Negative	0.8
697	6/16/2022 15:22	NIST			INTACT	RED			Negative	0.7
698	6/20/2022 8:27									8.68
699	6/20/2022 8:28	nist				RED			Negative	0.9
700	6/20/2022 8:28	nist				RED			Positive	1
701	6/20/2022 8:29	nist				RED			Negative	0.7
702	6/20/2022 8:29	nist				RED			Negative	0.7
703	6/20/2022 8:30	nist				RED			Positive	1
704	6/20/2022 8:31	nist				RED			Positive	1
705	6/20/2022 8:38	WALL	DRYWALL	A	INTACT	BEIGE	KITCHEN	G2	Negative	< LOD
706	6/20/2022 8:38	WALL	DRYWALL	B	INTACT	BEIGE	KITCHEN	G2	Negative	< LOD
707	6/20/2022 8:39	WALL	DRYWALL	C	INTACT	BEIGE	KITCHEN	G2	Negative	< LOD
708	6/20/2022 8:39	WALL	DRYWALL	D	INTACT	BEIGE	KITCHEN	G2	Negative	< LOD
709	6/20/2022 8:39	CEILING	DRYWALL		INTACT	BEIGE	KITCHEN	G2	Negative	< LOD
710	6/20/2022 8:39	BASEBOARD	WOOD	A	INTACT	WHITE	KITCHEN	G2	Negative	< LOD
711	6/20/2022 8:40	CABINET	WOOD	B	INTACT	BROWN	KITCHEN	G2	Negative	< LOD
712	6/20/2022 8:40	WALL	DRYWALL	A	INTACT	BEIGE	dining	G2	Negative	< LOD
713	6/20/2022 8:40	WALL	DRYWALL	C	INTACT	BEIGE	dining	G2	Negative	< LOD
714	6/20/2022 8:41	WALL	DRYWALL	D	INTACT	BEIGE	dining	G2	Negative	< LOD
715	6/20/2022 8:41	WINDOW	WOOD	C	INTACT	WHITE	dining	G2	Negative	< LOD
716	6/20/2022 8:41	BASEBOARD	WOOD	C	INTACT	WHITE	dining	G2	Negative	< LOD
717	6/20/2022 8:42	CEILING	DRYWALL		INTACT	WHITE	dining	G2	Negative	< LOD
718	6/20/2022 8:42	WALL	DRYWALL	A	INTACT	BEIGE	LIVING ROOM	G2	Negative	< LOD
719	6/20/2022 8:42	WALL	DRYWALL	B	INTACT	BEIGE	LIVING ROOM	G2	Negative	< LOD
720	6/20/2022 8:43	WALL	DRYWALL	C	INTACT	BEIGE	LIVING ROOM	G2	Negative	< LOD
721	6/20/2022 8:43	WALL	DRYWALL	D	INTACT	BEIGE	LIVING ROOM	G2	Negative	< LOD
722	6/20/2022 8:43	CEILING	DRYWALL		INTACT	WHITE	LIVING ROOM	G2	Null	< LOD
723	6/20/2022 8:43	CEILING	DRYWALL		INTACT	WHITE	LIVING ROOM	G2	Negative	< LOD
724	6/20/2022 8:44	BASEBOARD	WOOD	A	INTACT	WHITE	LIVING ROOM	G2	Negative	< LOD
725	6/20/2022 8:44	TRIM	WOOD	C	INTACT	WHITE	LIVING ROOM	G2	Negative	< LOD
726	6/20/2022 8:45	WALL	DRYWALL	A	INTACT	BEIGE	HALL	G2	Negative	< LOD

Reading No	Time	Component	Substrate	Side	Condition	Color	Room	Unit	Results	Pb
727	6/20/2022 8:45	WALL	DRYWALL	B	INTACT	BEIGE	HALL	G2	Negative	< LOD
728	6/20/2022 8:45	WALL	DRYWALL	C	INTACT	BEIGE	HALL	G2	Negative	< LOD
729	6/20/2022 8:45	WALL	DRYWALL	D	INTACT	BEIGE	HALL	G2	Negative	< LOD
730	6/20/2022 8:46	CEILING	DRYWALL		INTACT	WHITE	HALL	G2	Negative	< LOD
731	6/20/2022 8:46	BASEBOARD	WOOD	D	INTACT	WHITE	HALL	G2	Negative	< LOD
732	6/20/2022 8:46	DOOR	WOOD	A	INTACT	WHITE	HALL	G2	Negative	< LOD
733	6/20/2022 8:47	TRIM	WOOD	A	INTACT	WHITE	HALL	G2	Negative	< LOD
734	6/20/2022 8:47	jamb	WOOD	A	INTACT	WHITE	HALL	G2	Negative	< LOD
735	6/20/2022 8:48	WALL	DRYWALL	A	INTACT	BEIGE	BATHROOM	G2	Negative	< LOD
736	6/20/2022 8:48	WALL	DRYWALL	B	INTACT	BEIGE	BATHROOM	G2	Negative	< LOD
737	6/20/2022 8:49	WALL	DRYWALL	C	INTACT	BEIGE	BATHROOM	G2	Negative	< LOD
738	6/20/2022 8:49	WALL	DRYWALL	D	INTACT	BEIGE	BATHROOM	G2	Negative	< LOD
739	6/20/2022 8:49	CEILING	DRYWALL		INTACT	BEIGE	BATHROOM	G2	Negative	< LOD
740	6/20/2022 8:49	BASEBOARD	WOOD	A	INTACT	WHITE	BATHROOM	G2	Negative	< LOD
741	6/20/2022 8:50	CABINET	WOOD	C	INTACT	BROWN	BATHROOM	G2	Negative	< LOD
742	6/20/2022 8:50	DOOR	WOOD	A	INTACT	WHITE	BATHROOM	G2	Negative	< LOD
743	6/20/2022 8:50	TRIM	WOOD	A	INTACT	WHITE	BATHROOM	G2	Negative	< LOD
744	6/20/2022 8:50	jamb	WOOD	A	INTACT	WHITE	BATHROOM	G2	Negative	< LOD
745	6/20/2022 8:52	WALL	DRYWALL	A	INTACT	BEIGE	BEDROOM	G2	Negative	< LOD
746	6/20/2022 8:53	WALL	DRYWALL	B	INTACT	BEIGE	BEDROOM	G2	Negative	< LOD
747	6/20/2022 8:53	WALL	DRYWALL	C	INTACT	BEIGE	BEDROOM	G2	Null	< LOD
748	6/20/2022 8:53	WALL	DRYWALL	C	INTACT	BEIGE	BEDROOM	G2	Negative	< LOD
749	6/20/2022 8:53	WALL	DRYWALL	D	INTACT	BEIGE	BEDROOM	G2	Negative	< LOD
750	6/20/2022 8:54	CEILING	DRYWALL		INTACT	WHITE	BEDROOM	G2	Negative	< LOD
751	6/20/2022 8:54	WINDOW	WOOD	A	INTACT	WHITE	BEDROOM	G2	Negative	< LOD
752	6/20/2022 8:54	CLOSET	WOOD	B	INTACT	WHITE	BEDROOM	G2	Null	< LOD
753	6/20/2022 8:54	CLOSET	WOOD	B	INTACT	WHITE	BEDROOM	G2	Negative	< LOD
754	6/20/2022 8:54	TRIM	WOOD	B	INTACT	WHITE	BEDROOM	G2	Negative	< LOD
755	6/20/2022 8:55	jamb	WOOD	B	INTACT	WHITE	BEDROOM	G2	Negative	< LOD
756	6/20/2022 8:55	BASEBOARD	WOOD	B	INTACT	WHITE	BEDROOM	G2	Negative	< LOD
757	6/20/2022 8:58	WALL	DRYWALL	A	INTACT	BEIGE	KITCHEN	G1	Negative	< LOD
758	6/20/2022 8:58	WALL	DRYWALL	B	INTACT	BEIGE	KITCHEN	G1	Negative	< LOD
759	6/20/2022 8:59	WALL	DRYWALL	C	INTACT	BEIGE	KITCHEN	G1	Negative	< LOD

Reading No	Time	Component	Substrate	Side	Condition	Color	Room	Unit	Results	Pb
760	6/20/2022 8:59	WALL	DRYWALL	D	INTACT	BEIGE	KITCHEN	G1	Negative	< LOD
761	6/20/2022 8:59	CEILING	DRYWALL		INTACT	BEIGE	KITCHEN	G1	Negative	< LOD
762	6/20/2022 8:59	CABINET	WOOD	B	INTACT	BROWN	KITCHEN	G1	Negative	< LOD
763	6/20/2022 9:00	BASEBOARD	WOOD	C	INTACT	WHITE	KITCHEN	G1	Negative	< LOD
764	6/20/2022 9:00	WALL	DRYWALL	A	INTACT	BEIGE	dining	G1	Negative	< LOD
765	6/20/2022 9:00	WALL	DRYWALL	C	INTACT	BEIGE	dining	G1	Negative	< LOD
766	6/20/2022 9:01	WALL	DRYWALL	D	INTACT	BEIGE	dining	G1	Negative	< LOD
767	6/20/2022 9:01	CEILING	DRYWALL		INTACT	WHITE	dining	G1	Negative	< LOD
768	6/20/2022 9:02	WINDOW	WOOD	C	INTACT	WHITE	dining	G1	Negative	< LOD
769	6/20/2022 9:02	BASEBOARD	WOOD	C	INTACT	WHITE	dining	G1	Negative	< LOD
770	6/20/2022 9:02	WALL	DRYWALL	A	INTACT	BEIGE	LIVING ROOM	G1	Negative	< LOD
771	6/20/2022 9:03	WALL	DRYWALL	B	INTACT	BEIGE	LIVING ROOM	G1	Negative	< LOD
772	6/20/2022 9:03	WALL	DRYWALL	C	INTACT	BEIGE	LIVING ROOM	G1	Negative	< LOD
773	6/20/2022 9:03	WALL	DRYWALL	D	INTACT	BEIGE	LIVING ROOM	G1	Null	< LOD
774	6/20/2022 9:03	WALL	DRYWALL	D	INTACT	BEIGE	LIVING ROOM	G1	Negative	< LOD
775	6/20/2022 9:04	CEILING	DRYWALL		INTACT	WHITE	LIVING ROOM	G1	Negative	< LOD
776	6/20/2022 9:04	TRIM	WOOD	C	INTACT	WHITE	LIVING ROOM	G1	Negative	< LOD
777	6/20/2022 9:04	BASEBOARD	WOOD	C	INTACT	WHITE	LIVING ROOM	G1	Negative	< LOD
778	6/20/2022 9:05	WALL	DRYWALL	A	INTACT	BEIGE	HALL	G1	Negative	< LOD
779	6/20/2022 9:05	WALL	DRYWALL	B	INTACT	BEIGE	HALL	G1	Negative	< LOD
780	6/20/2022 9:06	WALL	DRYWALL	C	INTACT	BEIGE	HALL	G1	Negative	< LOD
781	6/20/2022 9:06	WALL	DRYWALL	D	INTACT	BEIGE	HALL	G1	Negative	< LOD
782	6/20/2022 9:06	CEILING	DRYWALL		INTACT	WHITE	HALL	G1	Negative	< LOD
783	6/20/2022 9:07	DOOR	WOOD	A	INTACT	WHITE	HALL	G1	Negative	< LOD
784	6/20/2022 9:07	TRIM	WOOD	A	INTACT	WHITE	HALL	G1	Negative	< LOD
785	6/20/2022 9:07	BASEBOARD	WOOD	A	INTACT	WHITE	HALL	G1	Negative	< LOD
786	6/20/2022 9:07	CLOSET	WOOD	C	INTACT	WHITE	HALL	G1	Negative	< LOD
787	6/20/2022 9:07	TRIM	WOOD	C	INTACT	WHITE	HALL	G1	Negative	< LOD
788	6/20/2022 9:08	jamb	WOOD	C	INTACT	WHITE	HALL	G1	Negative	< LOD
789	6/20/2022 9:08	WALL	DRYWALL	A	INTACT	BEIGE	BATHROOM	G1	Negative	< LOD
790	6/20/2022 9:08	WALL	DRYWALL	B	INTACT	BEIGE	BATHROOM	G1	Negative	< LOD
791	6/20/2022 9:09	WALL	DRYWALL	C	INTACT	BEIGE	BATHROOM	G1	Negative	< LOD
792	6/20/2022 9:09	WALL	DRYWALL	D	INTACT	BEIGE	BATHROOM	G1	Negative	< LOD

Reading No	Time	Component	Substrate	Side	Condition	Color	Room	Unit	Results	Pb
793	6/20/2022 9:09	CEILING	DRYWALL		INTACT	BEIGE	BATHROOM	G1	Negative	< LOD
794	6/20/2022 9:10	DOOR	WOOD	A	INTACT	WHITE	BATHROOM	G1	Negative	< LOD
795	6/20/2022 9:10	TRIM	WOOD	A	INTACT	WHITE	BATHROOM	G1	Negative	< LOD
796	6/20/2022 9:10	jamb	WOOD	A	INTACT	WHITE	BATHROOM	G1	Negative	< LOD
797	6/20/2022 9:10	BASEBOARD	WOOD	A	INTACT	WHITE	BATHROOM	G1	Negative	< LOD
798	6/20/2022 9:10	CABINET	WOOD	C	INTACT	BROWN	BATHROOM	G1	Negative	< LOD
799	6/20/2022 9:11	WALL	DRYWALL	A	INTACT	BEIGE	BEDROOM	G1	Negative	< LOD
800	6/20/2022 9:11	WALL	DRYWALL	B	INTACT	BEIGE	BEDROOM	G1	Negative	< LOD
801	6/20/2022 9:12	WALL	DRYWALL	C	INTACT	BEIGE	BEDROOM	G1	Negative	< LOD
802	6/20/2022 9:12	WALL	DRYWALL	D	INTACT	BEIGE	BEDROOM	G1	Negative	< LOD
803	6/20/2022 9:12	WINDOW	WOOD	A	INTACT	WHITE	BEDROOM	G1	Negative	< LOD
804	6/20/2022 9:13	CLOSET	WOOD	B	INTACT	WHITE	BEDROOM	G1	Negative	< LOD
805	6/20/2022 9:13	TRIM	WOOD	B	INTACT	WHITE	BEDROOM	G1	Null	< LOD
806	6/20/2022 9:13	TRIM	WOOD	B	INTACT	WHITE	BEDROOM	G1	Negative	< LOD
807	6/20/2022 9:13	jamb	WOOD	B	INTACT	WHITE	BEDROOM	G1	Negative	< LOD
808	6/20/2022 9:14	CEILING	DRYWALL		INTACT	WHITE	BEDROOM	G1	Negative	< LOD
809	6/20/2022 9:32	WALL	DRYWALL	A	INTACT	BEIGE	KITCHEN	G7	Negative	< LOD
810	6/20/2022 9:33	WALL	DRYWALL	B	INTACT	BEIGE	KITCHEN	G7	Negative	< LOD
811	6/20/2022 9:33	WALL	DRYWALL	C	INTACT	BEIGE	KITCHEN	G7	Negative	< LOD
812	6/20/2022 9:33	WALL	DRYWALL	D	INTACT	BEIGE	KITCHEN	G7	Negative	< LOD
813	6/20/2022 9:33	CEILING	DRYWALL		INTACT	BEIGE	KITCHEN	G7	Negative	< LOD
814	6/20/2022 9:34	BASEBOARD	WOOD	A	INTACT	WHITE	KITCHEN	G7	Negative	< LOD
815	6/20/2022 9:34	CABINET	WOOD	B	INTACT	BROWN	KITCHEN	G7	Negative	< LOD
816	6/20/2022 9:34	WALL	DRYWALL	A	INTACT	BEIGE	dining	G7	Negative	< LOD
817	6/20/2022 9:35	WALL	DRYWALL	B	INTACT	BEIGE	dining	G7	Negative	< LOD
818	6/20/2022 9:35	WALL	DRYWALL	C	INTACT	BEIGE	dining	G7	Negative	< LOD
819	6/20/2022 9:35	WINDOW	WOOD	C	INTACT	WHITE	dining	G7	Negative	< LOD
820	6/20/2022 9:35	BASEBOARD	WOOD	C	INTACT	WHITE	dining	G7	Negative	< LOD
821	6/20/2022 9:37	CEILING	DRYWALL		INTACT	WHITE	dining	G7	Negative	< LOD
822	6/20/2022 9:38	WALL	DRYWALL	A	INTACT	BEIGE	LIVING ROOM	G7	Negative	< LOD
823	6/20/2022 9:38	WALL	DRYWALL	B	INTACT	BEIGE	LIVING ROOM	G7	Negative	< LOD
824	6/20/2022 9:38	WALL	DRYWALL	C	INTACT	BEIGE	LIVING ROOM	G7	Negative	< LOD
825	6/20/2022 9:39	WALL	DRYWALL	D	INTACT	BEIGE	LIVING ROOM	G7	Negative	< LOD

Reading No	Time	Component	Substrate	Side	Condition	Color	Room	Unit	Results	Pb
826	6/20/2022 9:39	TRIM	WOOD	C	INTACT	WHITE	LIVING ROOM	G7	Negative	< LOD
827	6/20/2022 9:40	BASEBOARD	WOOD	B	INTACT	WHITE	LIVING ROOM	G7	Negative	< LOD
828	6/20/2022 9:41	WALL	DRYWALL	A	INTACT	BEIGE	HALL	G7	Negative	< LOD
829	6/20/2022 9:41	WALL	DRYWALL	B	INTACT	BEIGE	HALL	G7	Negative	< LOD
830	6/20/2022 9:41	WALL	DRYWALL	C	INTACT	BEIGE	HALL	G7	Negative	< LOD
831	6/20/2022 9:41	WALL	DRYWALL	D	INTACT	BEIGE	HALL	G7	Null	< LOD
832	6/20/2022 9:42	WALL	DRYWALL	D	INTACT	BEIGE	HALL	G7	Negative	< LOD
833	6/20/2022 9:42	CEILING	DRYWALL		INTACT	WHITE	HALL	G7	Negative	< LOD
834	6/20/2022 9:42	DOOR	WOOD	A	INTACT	WHITE	HALL	G7	Negative	< LOD
835	6/20/2022 9:42	TRIM	WOOD	A	INTACT	WHITE	HALL	G7	Negative	< LOD
836	6/20/2022 9:43	BASEBOARD	WOOD	A	INTACT	WHITE	HALL	G7	Negative	< LOD
837	6/20/2022 9:43	CLOSET	WOOD	D	INTACT	WHITE	HALL	G7	Negative	< LOD
838	6/20/2022 9:43	WALL	DRYWALL	A	INTACT	BEIGE	BATHROOM	G7	Negative	< LOD
839	6/20/2022 9:44	WALL	DRYWALL	B	INTACT	BEIGE	BATHROOM	G7	Negative	< LOD
840	6/20/2022 9:44	WALL	DRYWALL	C	INTACT	BEIGE	BATHROOM	G7	Negative	< LOD
841	6/20/2022 9:44	WALL	DRYWALL	D	INTACT	BEIGE	BATHROOM	G7	Negative	< LOD
842	6/20/2022 9:44	CEILING	DRYWALL		INTACT	BEIGE	BATHROOM	G7	Negative	< LOD
843	6/20/2022 9:45	BASEBOARD	WOOD	A	INTACT	WHITE	BATHROOM	G7	Negative	< LOD
844	6/20/2022 9:45	DOOR	WOOD	A	INTACT	WHITE	BATHROOM	G7	Negative	< LOD
845	6/20/2022 9:45	TRIM	WOOD	A	INTACT	WHITE	BATHROOM	G7	Negative	< LOD
846	6/20/2022 9:45	jamb	WOOD	A	INTACT	WHITE	BATHROOM	G7	Negative	< LOD
847	6/20/2022 9:46	CABINET	WOOD	C	INTACT	BROWN	BATHROOM	G7	Negative	< LOD
848	6/20/2022 9:46	WALL	DRYWALL	A	INTACT	BEIGE	BEDROOM	G7	Negative	< LOD
849	6/20/2022 9:46	WALL	DRYWALL	B	INTACT	BEIGE	BEDROOM	G7	Negative	< LOD
850	6/20/2022 9:47	WALL	DRYWALL	C	INTACT	BEIGE	BEDROOM	G7	Negative	< LOD
851	6/20/2022 9:47	WALL	DRYWALL	D	INTACT	BEIGE	BEDROOM	G7	Negative	< LOD
852	6/20/2022 9:47	CEILING	DRYWALL		INTACT	WHITE	BEDROOM	G7	Negative	0.6
853	6/20/2022 9:48	WINDOW	WOOD	A	INTACT	WHITE	BEDROOM	G7	Negative	< LOD
854	6/20/2022 9:48	BASEBOARD	WOOD	A	INTACT	WHITE	BEDROOM	G7	Negative	< LOD
855	6/20/2022 9:48	CLOSET	WOOD	D	INTACT	WHITE	BEDROOM	G7	Negative	< LOD
856	6/20/2022 9:48	TRIM	WOOD	D	INTACT	WHITE	BEDROOM	G7	Negative	< LOD
857	6/20/2022 9:49	jamb	WOOD	D	INTACT	WHITE	BEDROOM	G7	Negative	< LOD
858	6/20/2022 9:56	WALL	DRYWALL	A	INTACT	BEIGE	HALL	G10	Negative	< LOD

Reading No	Time	Component	Substrate	Side	Condition	Color	Room	Unit	Results	Pb
859	6/20/2022 9:57	WALL	DRYWALL	B	INTACT	BEIGE	HALL	G10	Negative	< LOD
860	6/20/2022 9:57	WALL	DRYWALL	C	INTACT	BEIGE	HALL	G10	Negative	< LOD
861	6/20/2022 9:58	WALL	DRYWALL	D	INTACT	BEIGE	HALL	G10	Negative	< LOD
862	6/20/2022 9:58	CEILING	DRYWALL		INTACT	WHITE	HALL	G10	Negative	< LOD
863	6/20/2022 9:58	DOOR	WOOD	A	INTACT	WHITE	HALL	G10	Negative	< LOD
864	6/20/2022 9:58	TRIM	WOOD	A	INTACT	WHITE	HALL	G10	Negative	< LOD
865	6/20/2022 9:59	jamb	WOOD	A	INTACT	WHITE	HALL	G10	Negative	< LOD
866	6/20/2022 9:59	BASEBOARD	WOOD	A	INTACT	WHITE	HALL	G10	Negative	< LOD
867	6/20/2022 9:59	CLOSET	WOOD	B	INTACT	WHITE	HALL	G10	Negative	< LOD
868	6/20/2022 10:00	WALL	DRYWALL	A	INTACT	BEIGE	BEDROOM	G10	Negative	< LOD
869	6/20/2022 10:00	WALL	DRYWALL	B	INTACT	BEIGE	BEDROOM	G10	Negative	< LOD
870	6/20/2022 10:00	WALL	DRYWALL	C	INTACT	BEIGE	BEDROOM	G10	Negative	< LOD
871	6/20/2022 10:01	WALL	DRYWALL	D	INTACT	BEIGE	BEDROOM	G10	Negative	< LOD
872	6/20/2022 10:01	WALL	DRYWALL	D	INTACT	BEIGE	BEDROOM	G10	Negative	< LOD
873	6/20/2022 10:01	WINDOW	WOOD	A	INTACT	WHITE	BEDROOM	G10	Negative	< LOD
874	6/20/2022 10:01	CLOSET	WOOD	B	INTACT	WHITE	BEDROOM	G10	Negative	< LOD
875	6/20/2022 10:02	TRIM	WOOD	B	INTACT	WHITE	BEDROOM	G10	Negative	< LOD
876	6/20/2022 10:02	jamb	WOOD	C	INTACT	WHITE	BEDROOM	G10	Negative	< LOD
877	6/20/2022 10:03	CEILING	DRYWALL		INTACT	WHITE	BEDROOM	G10	Negative	< LOD
878	6/20/2022 10:03	WALL	DRYWALL	A	INTACT	BEIGE	BATHROOM	G10	Negative	< LOD
879	6/20/2022 10:03	WALL	DRYWALL	B	INTACT	BEIGE	BATHROOM	G10	Negative	< LOD
880	6/20/2022 10:04	WALL	DRYWALL	C	INTACT	BEIGE	BATHROOM	G10	Negative	< LOD
881	6/20/2022 10:04	WALL	DRYWALL	D	INTACT	BEIGE	BATHROOM	G10	Negative	< LOD
882	6/20/2022 10:04	CEILING	DRYWALL		INTACT	BEIGE	BATHROOM	G10	Negative	< LOD
883	6/20/2022 10:04	DOOR	WOOD	A	INTACT	WHITE	BATHROOM	G10	Negative	< LOD
884	6/20/2022 10:05	TRIM	WOOD	A	INTACT	WHITE	BATHROOM	G10	Negative	< LOD
885	6/20/2022 10:05	jamb	WOOD	A	INTACT	WHITE	BATHROOM	G10	Negative	< LOD
886	6/20/2022 10:05	BASEBOARD	WOOD	A	INTACT	WHITE	BATHROOM	G10	Negative	< LOD
887	6/20/2022 10:05	CABINET	WOOD	C	INTACT	BROWN	BATHROOM	G10	Negative	< LOD
888	6/20/2022 10:06	BASEBOARD	WOOD	A	INTACT	WHITE	BEDROOM	G10	Negative	< LOD
889	6/20/2022 10:07	WALL	DRYWALL	A	INTACT	BEIGE	LIVING ROOM	G10	Negative	< LOD
890	6/20/2022 10:07	WALL	DRYWALL	B	INTACT	BEIGE	LIVING ROOM	G10	Negative	< LOD
891	6/20/2022 10:07	WALL	DRYWALL	C	INTACT	BEIGE	LIVING ROOM	G10	Negative	< LOD

Reading No	Time	Component	Substrate	Side	Condition	Color	Room	Unit	Results	Pb
892	6/20/2022 10:07	WALL	DRYWALL	D	INTACT	BEIGE	LIVING ROOM	G10	Negative	< LOD
893	6/20/2022 10:08	CEILING	DRYWALL		INTACT	WHITE	LIVING ROOM	G10	Negative	< LOD
894	6/20/2022 10:08	BASEBOARD	WOOD	A	INTACT	WHITE	LIVING ROOM	G10	Negative	< LOD
895	6/20/2022 10:08	TRIM	WOOD	C	INTACT	WHITE	LIVING ROOM	G10	Negative	< LOD
896	6/20/2022 10:09	WALL	DRYWALL	A	INTACT	BEIGE	dining	G10	Negative	< LOD
897	6/20/2022 10:09	WALL	DRYWALL	C	INTACT	BEIGE	dining	G10	Negative	< LOD
898	6/20/2022 10:09	WALL	DRYWALL	D	INTACT	BEIGE	dining	G10	Negative	< LOD
899	6/20/2022 10:10	WINDOW	WOOD	C	INTACT	WHITE	dining	G10	Negative	< LOD
900	6/20/2022 10:10	BASEBOARD	WOOD	A	INTACT	WHITE	dining	G10	Negative	< LOD
901	6/20/2022 10:10	WALL	DRYWALL	A	INTACT	BEIGE	KITCHEN	G10	Negative	< LOD
902	6/20/2022 10:11	WALL	DRYWALL	B	INTACT	BEIGE	KITCHEN	G10	Negative	< LOD
903	6/20/2022 10:11	WALL	DRYWALL	C	INTACT	BEIGE	KITCHEN	G10	Negative	< LOD
904	6/20/2022 10:11	WALL	DRYWALL	D	INTACT	BEIGE	KITCHEN	G10	Negative	< LOD
905	6/20/2022 10:11	BASEBOARD	WOOD	A	INTACT	WHITE	KITCHEN	G10	Negative	< LOD
906	6/20/2022 10:12	CABINET	WOOD	B	INTACT	BROWN	KITCHEN	G10	Negative	< LOD
907	6/20/2022 10:12	CEILING	WOOD		INTACT	BEIGE	KITCHEN	G10	Negative	< LOD
908	6/20/2022 10:13	CEILING	WOOD		INTACT	WHITE	dining	G10	Negative	< LOD
909	6/20/2022 10:14	soffit	WOOD	C	INTACT	YELLOW	OUTSIDE	G10	Negative	< LOD
910	6/20/2022 10:15	fascia	WOOD	C	INTACT	YELLOW	OUTSIDE	G10	Negative	< LOD
911	6/20/2022 10:17	STRINGER	WOOD	A	INTACT	YELLOW	OUTSIDE	G10	Negative	< LOD
912	6/20/2022 10:21	WALL	DRYWALL	A	INTACT	BEIGE	HALL	G12	Negative	< LOD
913	6/20/2022 10:21	WALL	DRYWALL	B	INTACT	BEIGE	HALL	G12	Negative	< LOD
914	6/20/2022 10:22	WALL	DRYWALL	C	INTACT	BEIGE	HALL	G12	Negative	< LOD
915	6/20/2022 10:22	WALL	DRYWALL	D	INTACT	BEIGE	HALL	G12	Negative	< LOD
916	6/20/2022 10:23	CEILING	DRYWALL		INTACT	WHITE	HALL	G12	Negative	< LOD
917	6/20/2022 10:23	DOOR	WOOD	A	INTACT	WHITE	HALL	G12	Negative	< LOD
918	6/20/2022 10:23	TRIM	WOOD	A	INTACT	WHITE	HALL	G12	Negative	< LOD
919	6/20/2022 10:23	BASEBOARD	WOOD	A	INTACT	WHITE	HALL	G12	Negative	< LOD
920	6/20/2022 10:24	CLOSET	WOOD	D	INTACT	WHITE	HALL	G12	Negative	< LOD
921	6/20/2022 10:24	WALL	DRYWALL	A	INTACT	BEIGE	BATHROOM	G12	Negative	< LOD
922	6/20/2022 10:24	WALL	DRYWALL	B	INTACT	BEIGE	BATHROOM	G12	Negative	< LOD
923	6/20/2022 10:24	WALL	DRYWALL	C	INTACT	BEIGE	BATHROOM	G12	Negative	< LOD
924	6/20/2022 10:25	WALL	DRYWALL	D	INTACT	BEIGE	BATHROOM	G12	Negative	< LOD

Reading No	Time	Component	Substrate	Side	Condition	Color	Room	Unit	Results	Pb
925	6/20/2022 10:25	CEILING	DRYWALL		INTACT	BEIGE	BATHROOM	G12	Negative	< LOD
926	6/20/2022 10:25	DOOR	WOOD	A	INTACT	WHITE	BATHROOM	G12	Negative	< LOD
927	6/20/2022 10:26	TRIM	WOOD	A	INTACT	WHITE	BATHROOM	G12	Negative	< LOD
928	6/20/2022 10:26	jamb	WOOD	A	INTACT	WHITE	BATHROOM	G12	Negative	< LOD
929	6/20/2022 10:26	CABINET	WOOD	C	INTACT	BROWN	BATHROOM	G12	Negative	< LOD
930	6/20/2022 10:26	BASEBOARD	WOOD	A	INTACT	WHITE	BATHROOM	G12	Negative	< LOD
931	6/20/2022 10:27	BASEBOARD	WOOD	A	INTACT	WHITE	HALL	G12	Negative	< LOD
932	6/20/2022 10:27	WALL	DRYWALL	A	INTACT	BEIGE	BEDROOM	G12	Negative	< LOD
933	6/20/2022 10:27	WALL	DRYWALL	B	INTACT	BEIGE	BEDROOM	G12	Negative	< LOD
934	6/20/2022 10:28	WALL	DRYWALL	C	INTACT	BEIGE	BEDROOM	G12	Negative	< LOD
935	6/20/2022 10:28	WALL	DRYWALL	D	INTACT	BEIGE	BEDROOM	G12	Negative	< LOD
936	6/20/2022 10:28	WINDOW	WOOD	A	INTACT	WHITE	BEDROOM	G12	Negative	< LOD
937	6/20/2022 10:29	BASEBOARD	WOOD	C	INTACT	WHITE	BEDROOM	G12	Negative	< LOD
938	6/20/2022 10:29	DOOR	WOOD	C	INTACT	WHITE	BEDROOM	G12	Negative	< LOD
939	6/20/2022 10:29	TRIM	WOOD	C	INTACT	WHITE	BEDROOM	G12	Negative	< LOD
940	6/20/2022 10:29	jamb	WOOD	C	INTACT	WHITE	BEDROOM	G12	Negative	< LOD
941	6/20/2022 10:30	CEILING	DRYWALL		INTACT	WHITE	BEDROOM	G12	Negative	< LOD
942	6/20/2022 10:30	WALL	DRYWALL	A	INTACT	BEIGE	KITCHEN	G12	Negative	< LOD
943	6/20/2022 10:31	WALL	DRYWALL	B	INTACT	BEIGE	KITCHEN	G12	Negative	< LOD
944	6/20/2022 10:31	WALL	DRYWALL	C	INTACT	BEIGE	KITCHEN	G12	Negative	< LOD
945	6/20/2022 10:31	WALL	DRYWALL	D	INTACT	BEIGE	KITCHEN	G12	Negative	< LOD
946	6/20/2022 10:31	CEILING	DRYWALL		INTACT	BEIGE	KITCHEN	G12	Negative	< LOD
947	6/20/2022 10:32	BASEBOARD	WOOD	A	INTACT	WHITE	KITCHEN	G12	Negative	< LOD
948	6/20/2022 10:32	CABINET	WOOD	B	INTACT	BROWN	KITCHEN	G12	Negative	< LOD
949	6/20/2022 10:33	WALL	DRYWALL	A	INTACT	BEIGE	dining	G12	Negative	< LOD
950	6/20/2022 10:33	WALL	DRYWALL	B	INTACT	BEIGE	dining	G12	Null	< LOD
951	6/20/2022 10:33	WALL	DRYWALL	B	INTACT	BEIGE	dining	G12	Negative	< LOD
952	6/20/2022 10:33	WALL	DRYWALL	C	INTACT	BEIGE	dining	G12	Negative	< LOD
953	6/20/2022 10:34	CEILING	DRYWALL		INTACT	WHITE	dining	G12	Negative	< LOD
954	6/20/2022 10:34	BASEBOARD	WOOD	A	INTACT	WHITE	dining	G12	Negative	< LOD
955	6/20/2022 10:34	WINDOW	WOOD	C	INTACT	WHITE	dining	G12	Negative	< LOD
956	6/20/2022 10:35	WALL	DRYWALL	A	INTACT	BEIGE	LIVING ROOM	G12	Negative	< LOD
957	6/20/2022 10:35	WALL	DRYWALL	B	INTACT	BEIGE	LIVING ROOM	G12	Null	< LOD

Reading No	Time	Component	Substrate	Side	Condition	Color	Room	Unit	Results	Pb
958	6/20/2022 10:35	WALL	DRYWALL	B	INTACT	BEIGE	LIVING ROOM	G12	Negative	< LOD
959	6/20/2022 10:35	WALL	DRYWALL	C	INTACT	BEIGE	LIVING ROOM	G12	Negative	< LOD
960	6/20/2022 10:36	TRIM	WOOD	C	INTACT	WHITE	LIVING ROOM	G12	Negative	< LOD
961	6/20/2022 10:36	BASEBOARD	WOOD	B	INTACT	WHITE	LIVING ROOM	G12	Negative	< LOD
962	6/20/2022 10:37	CEILING	DRYWALL		INTACT	WHITE	LIVING ROOM	G12	Negative	< LOD
963	6/20/2022 10:42	WALL	DRYWALL	A	INTACT	BEIGE	HALL	G11	Negative	< LOD
964	6/20/2022 10:42	WALL	DRYWALL	B	INTACT	BEIGE	HALL	G11	Negative	< LOD
965	6/20/2022 10:42	WALL	DRYWALL	C	INTACT	BEIGE	HALL	G11	Negative	< LOD
966	6/20/2022 10:43	WALL	DRYWALL	D	INTACT	BEIGE	HALL	G11	Null	< LOD
967	6/20/2022 10:43	WALL	DRYWALL	D	INTACT	BEIGE	HALL	G11	Null	< LOD
968	6/20/2022 10:43	WALL	DRYWALL	D	INTACT	BEIGE	HALL	G11	Negative	< LOD
969	6/20/2022 10:44	CEILING	DRYWALL		INTACT	BEIGE	HALL	G11	Negative	< LOD
970	6/20/2022 10:45	BASEBOARD	WOOD	A	INTACT	WHITE	HALL	G11	Negative	< LOD
971	6/20/2022 10:45	DOOR	WOOD	A	INTACT	WHITE	HALL	G11	Negative	< LOD
972	6/20/2022 10:46	TRIM	WOOD	A	INTACT	WHITE	HALL	G11	Negative	< LOD
973	6/20/2022 10:46	CLOSET	WOOD	D	INTACT	WHITE	HALL	G11	Negative	< LOD
974	6/20/2022 10:47	WALL	DRYWALL	A	INTACT	BEIGE	BATHROOM	G11	Negative	< LOD
975	6/20/2022 10:47	WALL	DRYWALL	B	INTACT	BEIGE	BATHROOM	G11	Negative	< LOD
976	6/20/2022 10:48	WALL	DRYWALL	C	INTACT	BEIGE	BATHROOM	G11	Negative	< LOD
977	6/20/2022 10:48	WALL	DRYWALL	D	INTACT	BEIGE	BATHROOM	G11	Negative	< LOD
978	6/20/2022 10:48	CEILING	DRYWALL		INTACT	WHITE	BATHROOM	G11	Negative	< LOD
979	6/20/2022 10:49	BASEBOARD	WOOD	A	INTACT	WHITE	BATHROOM	G11	Negative	< LOD
980	6/20/2022 10:49	DOOR	WOOD	A	INTACT	WHITE	BATHROOM	G11	Negative	< LOD
981	6/20/2022 10:49	TRIM	WOOD	A	INTACT	WHITE	BATHROOM	G11	Negative	< LOD
982	6/20/2022 10:49	jamb	WOOD	A	INTACT	WHITE	BATHROOM	G11	Null	< LOD
983	6/20/2022 10:49	jamb	WOOD	A	INTACT	WHITE	BATHROOM	G11	Negative	< LOD
984	6/20/2022 10:50	CABINET	WOOD	C	INTACT	BROWN	BATHROOM	G11	Negative	< LOD
985	6/20/2022 10:51	WALL	DRYWALL	A	INTACT	BEIGE	BEDROOM	G11	Negative	< LOD
986	6/20/2022 10:51	WALL	DRYWALL	C	INTACT	BEIGE	BEDROOM	G11	Negative	< LOD
987	6/20/2022 10:51	WALL	DRYWALL	D	INTACT	BEIGE	BEDROOM	G11	Negative	< LOD
988	6/20/2022 10:51	BASEBOARD	WOOD	D	INTACT	WHITE	BEDROOM	G11	Negative	< LOD
989	6/20/2022 10:52	WINDOW	WOOD	A	INTACT	WHITE	BEDROOM	G11	Negative	< LOD
990	6/20/2022 10:52	DOOR	WOOD	C	INTACT	WHITE	BEDROOM	G11	Negative	< LOD

Reading No	Time	Component	Substrate	Side	Condition	Color	Room	Unit	Results	Pb
991	6/20/2022 10:52	TRIM	WOOD	C	INTACT	WHITE	BEDROOM	G11	Negative	< LOD
992	6/20/2022 10:52	jamb	WOOD	C	INTACT	WHITE	BEDROOM	G11	Negative	< LOD
993	6/20/2022 10:53	CEILING	DRYWALL		INTACT	WHITE	BEDROOM	G11	Negative	< LOD
994	6/20/2022 10:54	WALL	DRYWALL	A	INTACT	BEIGE	KITCHEN	G11	Negative	< LOD
995	6/20/2022 10:54	WALL	DRYWALL	B	INTACT	BEIGE	KITCHEN	G11	Negative	< LOD
996	6/20/2022 10:54	WALL	DRYWALL	C	INTACT	BEIGE	KITCHEN	G11	Negative	< LOD
997	6/20/2022 10:55	WALL	DRYWALL	D	INTACT	BEIGE	KITCHEN	G11	Negative	< LOD
998	6/20/2022 10:55	CEILING	DRYWALL		INTACT	BEIGE	KITCHEN	G11	Negative	< LOD
999	6/20/2022 10:55	CABINET	WOOD	D	INTACT	BROWN	KITCHEN	G11	Negative	< LOD
1000	6/20/2022 10:56	BASEBOARD	WOOD	C	INTACT	BROWN	KITCHEN	G11	Negative	< LOD
1001	6/20/2022 10:56	WALL	DRYWALL	A	INTACT	BEIGE	dining	G11	Negative	< LOD
1002	6/20/2022 10:56	WALL	DRYWALL	B	INTACT	BEIGE	dining	G11	Negative	< LOD
1003	6/20/2022 10:57	WALL	DRYWALL	C	INTACT	BEIGE	dining	G11	Negative	< LOD
1004	6/20/2022 10:57	CEILING	DRYWALL		INTACT	WHITE	dining	G11	Negative	< LOD
1005	6/20/2022 10:58	WALL	DRYWALL	A	INTACT	BEIGE	LIVING ROOM	G11	Null	< LOD
1006	6/20/2022 10:58	WALL	DRYWALL	B	INTACT	BEIGE	LIVING ROOM	G11	Negative	< LOD
1007	6/20/2022 10:58	WALL	DRYWALL	C	INTACT	BEIGE	LIVING ROOM	G11	Negative	< LOD
1008	6/20/2022 10:59	WALL	DRYWALL	D	INTACT	BEIGE	LIVING ROOM	G11	Negative	< LOD
1009	6/20/2022 10:59	TRIM	WOOD	C	INTACT	WHITE	LIVING ROOM	G11	Negative	< LOD
1010	6/20/2022 10:59	BASEBOARD	WOOD	B	INTACT	WHITE	LIVING ROOM	G11	Negative	< LOD
1011	6/20/2022 11:00	CEILING	DRYWALL		INTACT	WHITE	LIVING ROOM	G11	Negative	< LOD
1012	6/20/2022 11:00	BASEBOARD	WOOD	A	INTACT	WHITE	LIVING ROOM	G11	Negative	< LOD
1013	6/20/2022 11:05	nist				RED			Negative	0.8
1014	6/20/2022 11:05	nist				RED			Negative	0.8
1015	6/20/2022 11:06	nist				RED			Negative	0.7
1016	6/20/2022 11:06	nist				RED			Negative	0.7
1017	6/20/2022 11:06	nist				RED			Negative	0.8
1018	6/20/2022 11:07	nist				RED			Negative	0.7
1019	6/20/2022 11:07	nist				RED			Negative	0.7
1020	6/20/2022 11:07	nist				RED			Negative	0.7
1021	6/20/2022 11:07	nist				RED			Negative	0.8
1022	6/20/2022 11:07	nist				RED			Negative	0.7
1023	6/20/2022 11:59									6.21

Reading No	Time	Component	Substrate	Side	Condition	Color	Room	Unit	Results	Pb
1024	6/20/2022 11:59	nist				RED			Positive	1.1
1025	6/20/2022 12:00	nist				RED			Positive	1
1026	6/20/2022 12:00	nist				RED			Negative	0.9
1027	6/20/2022 12:07	WALL	DRYWALL	A	INTACT	BEIGE	LIVING ROOM	H8	Negative	< LOD
1028	6/20/2022 12:07	WALL	DRYWALL	B	INTACT	BEIGE	LIVING ROOM	H8	Negative	< LOD
1029	6/20/2022 12:08	WALL	DRYWALL	C	INTACT	BEIGE	LIVING ROOM	H8	Null	< LOD
1030	6/20/2022 12:08	WALL	DRYWALL	C	INTACT	BEIGE	LIVING ROOM	H8	Negative	< LOD
1031	6/20/2022 12:08	WALL	DRYWALL	C	INTACT	BEIGE	LIVING ROOM	H8	Negative	< LOD
1032	6/20/2022 12:08	WALL	DRYWALL	C	INTACT	BEIGE	LIVING ROOM	H8	Negative	< LOD
1033	6/20/2022 12:09	WALL	DRYWALL	D	INTACT	BEIGE	LIVING ROOM	H8	Negative	< LOD
1034	6/20/2022 12:09	CEILING	DRYWALL		INTACT	WHITE	LIVING ROOM	H8	Negative	< LOD
1035	6/20/2022 12:09	BASEBOARD	WOOD	B	INTACT	WHITE	LIVING ROOM	H8	Negative	< LOD
1036	6/20/2022 12:10	TRIM	WOOD	C	INTACT	WHITE	LIVING ROOM	H8	Negative	< LOD
1037	6/20/2022 12:10	WINDOW	WOOD	C	INTACT	WHITE	dining	H8	Negative	< LOD
1038	6/20/2022 12:11	WALL	DRYWALL	D	INTACT	gray	dining	H8	Negative	< LOD
1039	6/20/2022 12:11	WALL	DRYWALL	C	INTACT	gray	dining	H8	Negative	< LOD
1040	6/20/2022 12:11	WALL	DRYWALL	A	INTACT	gray	dining	H8	Negative	< LOD
1041	6/20/2022 12:11	WALL	DRYWALL	B	INTACT	gray	dining	H8	Negative	< LOD
1042	6/20/2022 12:12	WALL	DRYWALL	B	INTACT	gray	dining	H8	Negative	< LOD
1043	6/20/2022 12:12	WALL	DRYWALL	A	INTACT	gray	KITCHEN	H8	Negative	< LOD
1044	6/20/2022 12:12	WALL	DRYWALL	B	INTACT	gray	KITCHEN	H8	Negative	< LOD
1045	6/20/2022 12:13	WALL	DRYWALL	C	INTACT	gray	KITCHEN	H8	Negative	< LOD
1046	6/20/2022 12:13	WALL	DRYWALL	D	INTACT	gray	KITCHEN	H8	Negative	< LOD
1047	6/20/2022 12:13	CEILING	DRYWALL		INTACT	gray	KITCHEN	H8	Negative	< LOD
1048	6/20/2022 12:14	CABINET	WOOD	B	INTACT	BROWN	KITCHEN	H8	Null	< LOD
1049	6/20/2022 12:14	CABINET	WOOD	B	INTACT	BROWN	KITCHEN	H8	Negative	< LOD
1050	6/20/2022 12:14	BASEBOARD	WOOD	A	INTACT	WHITE	KITCHEN	H8	Negative	< LOD
1051	6/20/2022 12:15	CEILING	DRYWALL		INTACT	WHITE	dining	H8	Null	< LOD
1052	6/20/2022 12:15	CEILING	DRYWALL		INTACT	WHITE	dining	H8	Negative	< LOD
1053	6/20/2022 12:16	WALL	DRYWALL	A	INTACT	gray	HALL	H8	Negative	< LOD
1054	6/20/2022 12:16	WALL	DRYWALL	B	INTACT	gray	HALL	H8	Negative	< LOD
1055	6/20/2022 12:16	WALL	DRYWALL	C	INTACT	gray	HALL	H8	Negative	< LOD
1056	6/20/2022 12:17	WALL	DRYWALL	D	INTACT	gray	HALL	H8	Negative	< LOD

Reading No	Time	Component	Substrate	Side	Condition	Color	Room	Unit	Results	Pb
1057	6/20/2022 12:17	DOOR	WOOD	A	INTACT	WHITE	HALL	H8	Negative	< LOD
1058	6/20/2022 12:17	TRIM	WOOD	A	INTACT	WHITE	HALL	H8	Negative	< LOD
1059	6/20/2022 12:17	BASEBOARD	WOOD	B	INTACT	WHITE	HALL	H8	Negative	< LOD
1060	6/20/2022 12:18	CLOSET	WOOD	D	INTACT	WHITE	HALL	H8	Negative	< LOD
1061	6/20/2022 12:18	WALL	DRYWALL	A	INTACT	gray	BATHROOM	H8	Negative	< LOD
1062	6/20/2022 12:19	WALL	DRYWALL	B	INTACT	gray	BATHROOM	H8	Negative	< LOD
1063	6/20/2022 12:19	WALL	DRYWALL	C	INTACT	gray	BATHROOM	H8	Negative	< LOD
1064	6/20/2022 12:19	WALL	DRYWALL	D	INTACT	gray	BATHROOM	H8	Negative	< LOD
1065	6/20/2022 12:19	CEILING	DRYWALL		INTACT	gray	BATHROOM	H8	Negative	< LOD
1066	6/20/2022 12:20	DOOR	WOOD	A	INTACT	WHITE	BATHROOM	H8	Negative	< LOD
1067	6/20/2022 12:20	TRIM	WOOD	A	INTACT	WHITE	BATHROOM	H8	Negative	< LOD
1068	6/20/2022 12:20	jamb	WOOD	A	INTACT	WHITE	BATHROOM	H8	Negative	< LOD
1069	6/20/2022 12:20	CABINET	WOOD	D	INTACT	BROWN	BATHROOM	H8	Negative	< LOD
1070	6/20/2022 12:21	BASEBOARD	WOOD	C	INTACT	WHITE	BATHROOM	H8	Negative	< LOD
1071	6/20/2022 12:22	WALL	DRYWALL	A	INTACT	gray	n bed	H8	Negative	< LOD
1072	6/20/2022 12:22	WALL	DRYWALL	B	INTACT	gray	n bed	H8	Negative	< LOD
1073	6/20/2022 12:22	WALL	DRYWALL	C	INTACT	gray	n bed	H8	Negative	< LOD
1074	6/20/2022 12:22	WALL	DRYWALL	D	INTACT	gray	n bed	H8	Negative	< LOD
1075	6/20/2022 12:23	WINDOW	WOOD	A	INTACT	WHITE	n bed	H8	Negative	< LOD
1076	6/20/2022 12:23	BASEBOARD	WOOD	C	INTACT	WHITE	n bed	H8	Negative	< LOD
1077	6/20/2022 12:23	DOOR	WOOD	C	INTACT	WHITE	n bed	H8	Negative	< LOD
1078	6/20/2022 12:23	TRIM	WOOD	C	INTACT	WHITE	n bed	H8	Negative	< LOD
1079	6/20/2022 12:23	jamb	WOOD	C	INTACT	WHITE	n bed	H8	Negative	< LOD
1080	6/20/2022 12:24	CEILING	DRYWALL		INTACT	WHITE	n bed	H8	Negative	< LOD
1081	6/20/2022 12:24	WALL	DRYWALL	A	INTACT	gray	s bed	H8	Negative	< LOD
1082	6/20/2022 12:25	WALL	DRYWALL	B	INTACT	gray	s bed	H8	Negative	< LOD
1083	6/20/2022 12:25	WALL	DRYWALL	C	INTACT	gray	s bed	H8	Negative	< LOD
1084	6/20/2022 12:25	WALL	DRYWALL	D	INTACT	gray	s bed	H8	Negative	< LOD
1085	6/20/2022 12:25	WINDOW	WOOD	A	INTACT	WHITE	s bed	H8	Negative	< LOD
1086	6/20/2022 12:26	BASEBOARD	WOOD	D	INTACT	WHITE	s bed	H8	Negative	< LOD
1087	6/20/2022 12:26	DOOR	WOOD	C	INTACT	WHITE	s bed	H8	Negative	< LOD
1088	6/20/2022 12:26	TRIM	WOOD	C	INTACT	WHITE	s bed	H8	Negative	< LOD
1089	6/20/2022 12:26	jamb	WOOD	C	INTACT	WHITE	s bed	H8	Negative	< LOD

Reading No	Time	Component	Substrate	Side	Condition	Color	Room	Unit	Results	Pb
1090	6/20/2022 12:27	CEILING	DRYWALL		INTACT	WHITE	s bed	H8	Negative	< LOD
1091	6/20/2022 12:33	WALL	DRYWALL	A	INTACT	BEIGE	HALL	H7	Negative	< LOD
1092	6/20/2022 12:33	WALL	DRYWALL	B	INTACT	BEIGE	HALL	H7	Negative	< LOD
1093	6/20/2022 12:33	WALL	DRYWALL	C	INTACT	BEIGE	HALL	H7	Negative	< LOD
1094	6/20/2022 12:34	WALL	DRYWALL	D	INTACT	BEIGE	HALL	H7	Negative	< LOD
1095	6/20/2022 12:34	CEILING	DRYWALL		INTACT	WHITE	HALL	H7	Negative	< LOD
1096	6/20/2022 12:34	BASEBOARD	WOOD	A	INTACT	WHITE	HALL	H7	Negative	< LOD
1097	6/20/2022 12:35	DOOR	WOOD	A	INTACT	WHITE	HALL	H7	Negative	< LOD
1098	6/20/2022 12:35	TRIM	WOOD	A	INTACT	WHITE	HALL	H7	Negative	< LOD
1099	6/20/2022 12:35	CLOSET	WOOD	D	INTACT	WHITE	HALL	H7	Negative	< LOD
1100	6/20/2022 12:35	WALL	DRYWALL	A	INTACT	BEIGE	BATHROOM	H7	Negative	< LOD
1101	6/20/2022 12:36	WALL	DRYWALL	B	INTACT	BEIGE	BATHROOM	H7	Negative	< LOD
1102	6/20/2022 12:36	WALL	DRYWALL	C	INTACT	BEIGE	BATHROOM	H7	Negative	< LOD
1103	6/20/2022 12:36	WALL	DRYWALL	D	INTACT	BEIGE	BATHROOM	H7	Negative	< LOD
1104	6/20/2022 12:36	CEILING	DRYWALL		INTACT	BEIGE	BATHROOM	H7	Negative	< LOD
1105	6/20/2022 12:37	DOOR	WOOD	A	INTACT	WHITE	BATHROOM	H7	Negative	< LOD
1106	6/20/2022 12:37	TRIM	WOOD	A	INTACT	WHITE	BATHROOM	H7	Negative	< LOD
1107	6/20/2022 12:37	jamb	WOOD	A	INTACT	WHITE	BATHROOM	H7	Negative	< LOD
1108	6/20/2022 12:37	BASEBOARD	WOOD	C	INTACT	WHITE	BATHROOM	H7	Negative	< LOD
1109	6/20/2022 12:38	CABINET	WOOD	D	INTACT	BROWN	BATHROOM	H7	Negative	< LOD
1110	6/20/2022 12:38	WALL	DRYWALL	A	INTACT	BEIGE	n bed	H7	Negative	< LOD
1111	6/20/2022 12:38	WALL	DRYWALL	B	INTACT	BEIGE	n bed	H7	Negative	< LOD
1112	6/20/2022 12:39	WALL	DRYWALL	C	INTACT	BEIGE	n bed	H7	Negative	< LOD
1113	6/20/2022 12:39	WALL	DRYWALL	D	INTACT	BEIGE	n bed	H7	Negative	< LOD
1114	6/20/2022 12:39	CEILING	DRYWALL		INTACT	WHITE	n bed	H7	Negative	< LOD
1115	6/20/2022 12:40	WINDOW	WOOD	A	INTACT	WHITE	n bed	H7	Negative	< LOD
1116	6/20/2022 12:40	DOOR	WOOD	C	INTACT	WHITE	n bed	H7	Negative	< LOD
1117	6/20/2022 12:40	TRIM	WOOD	C	INTACT	WHITE	n bed	H7	Negative	< LOD
1118	6/20/2022 12:40	jamb	WOOD	C	INTACT	WHITE	n bed	H7	Negative	< LOD
1119	6/20/2022 12:40	BASEBOARD	WOOD	C	INTACT	WHITE	n bed	H7	Negative	< LOD
1120	6/20/2022 12:41	WALL	DRYWALL	A	INTACT	BEIGE	s bed	H7	Negative	< LOD
1121	6/20/2022 12:41	WALL	DRYWALL	B	INTACT	BEIGE	s bed	H7	Negative	< LOD
1122	6/20/2022 12:41	WALL	DRYWALL	C	INTACT	BEIGE	s bed	H7	Negative	< LOD

Reading No	Time	Component	Substrate	Side	Condition	Color	Room	Unit	Results	Pb
1123	6/20/2022 12:42	WALL	DRYWALL	D	INTACT	BEIGE	s bed	H7	Negative	< LOD
1124	6/20/2022 12:42	CEILING	DRYWALL		INTACT	WHITE	s bed	H7	Negative	< LOD
1125	6/20/2022 12:42	WINDOW	WOOD	A	INTACT	WHITE	s bed	H7	Negative	< LOD
1126	6/20/2022 12:43	BASEBOARD	WOOD	C	INTACT	WHITE	s bed	H7	Negative	< LOD
1127	6/20/2022 12:43	DOOR	WOOD	C	INTACT	WHITE	s bed	H7	Negative	< LOD
1128	6/20/2022 12:43	TRIM	WOOD	C	INTACT	WHITE	s bed	H7	Negative	< LOD
1129	6/20/2022 12:43	jamb	WOOD	C	INTACT	WHITE	s bed	H7	Negative	< LOD
1130	6/20/2022 12:44	WALL	DRYWALL	A	INTACT	BEIGE	LIVING ROOM	H7	Negative	< LOD
1131	6/20/2022 12:44	WALL	DRYWALL	B	INTACT	BEIGE	LIVING ROOM	H7	Negative	< LOD
1132	6/20/2022 12:45	WALL	DRYWALL	C	INTACT	BEIGE	LIVING ROOM	H7	Negative	< LOD
1133	6/20/2022 12:45	WALL	DRYWALL	D	INTACT	BEIGE	LIVING ROOM	H7	Negative	< LOD
1134	6/20/2022 12:45	CEILING	DRYWALL		INTACT	WHITE	LIVING ROOM	H7	Negative	< LOD
1135	6/20/2022 12:45	WINDOW	WOOD	C	INTACT	WHITE	LIVING ROOM	H7	Negative	< LOD
1136	6/20/2022 12:46	BASEBOARD	WOOD	D	INTACT	WHITE	LIVING ROOM	H7	Negative	< LOD
1137	6/20/2022 12:46	WALL	DRYWALL	A	INTACT	BEIGE	KITCHEN	H7	Negative	< LOD
1138	6/20/2022 12:47	WALL	DRYWALL	B	INTACT	BEIGE	KITCHEN	H7	Negative	< LOD
1139	6/20/2022 12:47	WALL	DRYWALL	C	INTACT	BEIGE	KITCHEN	H7	Negative	< LOD
1140	6/20/2022 12:47	WALL	DRYWALL	D	INTACT	BEIGE	KITCHEN	H7	Negative	< LOD
1141	6/20/2022 12:47	CEILING	DRYWALL		INTACT	BEIGE	KITCHEN	H7	Negative	< LOD
1142	6/20/2022 12:48	BASEBOARD	WOOD	A	INTACT	WHITE	KITCHEN	H7	Negative	< LOD
1143	6/20/2022 12:48	CABINET	WOOD	B	INTACT	BROWN	KITCHEN	H7	Negative	< LOD
1144	6/20/2022 12:48	WALL	DRYWALL	A	INTACT	BEIGE	dining	H7	Negative	< LOD
1145	6/20/2022 12:49	WALL	DRYWALL	B	INTACT	BEIGE	dining	H7	Negative	< LOD
1146	6/20/2022 12:49	WALL	DRYWALL	C	INTACT	BEIGE	dining	H7	Negative	< LOD
1147	6/20/2022 12:49	WINDOW	WOOD	C	INTACT	WHITE	dining	H7	Negative	< LOD
1148	6/20/2022 12:50	BASEBOARD	WOOD	A	INTACT	WHITE	dining	H7	Negative	< LOD
1149	6/20/2022 12:50	CEILING	DRYWALL		INTACT	WHITE	dining	H7	Negative	< LOD
1150	6/20/2022 12:57	WALL	DRYWALL	A	INTACT	BEIGE	KITCHEN	H3	Negative	< LOD
1151	6/20/2022 12:57	WALL	DRYWALL	B	INTACT	BEIGE	KITCHEN	H3	Negative	< LOD
1152	6/20/2022 12:57	WALL	DRYWALL	C	INTACT	BEIGE	KITCHEN	H3	Negative	< LOD
1153	6/20/2022 12:58	WALL	DRYWALL	D	INTACT	BEIGE	KITCHEN	H3	Negative	< LOD
1154	6/20/2022 12:58	CEILING	DRYWALL		INTACT	BEIGE	KITCHEN	H3	Negative	< LOD
1155	6/20/2022 12:58	BASEBOARD	WOOD	A	INTACT	WHITE	KITCHEN	H3	Negative	< LOD

Reading No	Time	Component	Substrate	Side	Condition	Color	Room	Unit	Results	Pb
1156	6/20/2022 12:59	CABINET	WOOD	B	INTACT	BROWN	KITCHEN	H3	Negative	< LOD
1157	6/20/2022 12:59	WALL	DRYWALL	A	INTACT	BEIGE	dining	H3	Negative	< LOD
1158	6/20/2022 12:59	WALL	DRYWALL	B	INTACT	BEIGE	dining	H3	Negative	< LOD
1159	6/20/2022 13:00	WALL	DRYWALL	C	INTACT	BEIGE	dining	H3	Negative	< LOD
1160	6/20/2022 13:00	WALL	DRYWALL	D	INTACT	BEIGE	dining	H3	Negative	< LOD
1161	6/20/2022 13:01	CEILING	DRYWALL		INTACT	WHITE	dining	H3	Negative	< LOD
1162	6/20/2022 13:01	BASEBOARD	WOOD	A	INTACT	WHITE	dining	H3	Negative	< LOD
1163	6/20/2022 13:01	WINDOW	WOOD	C	INTACT	WHITE	dining	H3	Negative	< LOD
1164	6/20/2022 13:02	WALL	DRYWALL	A	INTACT	BEIGE	LIVING ROOM	H3	Negative	< LOD
1165	6/20/2022 13:02	WALL	DRYWALL	B	INTACT	BEIGE	LIVING ROOM	H3	Negative	< LOD
1166	6/20/2022 13:02	WALL	DRYWALL	C	INTACT	BEIGE	LIVING ROOM	H3	Negative	< LOD
1167	6/20/2022 13:02	WALL	DRYWALL	D	INTACT	BEIGE	LIVING ROOM	H3	Negative	< LOD
1168	6/20/2022 13:03	BASEBOARD	WOOD	A	INTACT	WHITE	LIVING ROOM	H3	Negative	< LOD
1169	6/20/2022 13:03	TRIM	WOOD	C	INTACT	WHITE	LIVING ROOM	H3	Negative	< LOD
1170	6/20/2022 13:04	CEILING	DRYWALL		INTACT	WHITE	LIVING ROOM	H3	Negative	< LOD
1171	6/20/2022 13:04	WALL	DRYWALL	A	INTACT	BEIGE	HALL	H3	Negative	< LOD
1172	6/20/2022 13:04	WALL	DRYWALL	B	INTACT	BEIGE	HALL	H3	Negative	< LOD
1173	6/20/2022 13:04	WALL	DRYWALL	C	INTACT	BEIGE	HALL	H3	Negative	< LOD
1174	6/20/2022 13:05	WALL	DRYWALL	D	INTACT	BEIGE	HALL	H3	Negative	< LOD
1175	6/20/2022 13:05	CEILING	DRYWALL		INTACT	WHITE	HALL	H3	Negative	< LOD
1176	6/20/2022 13:05	CLOSET	WOOD	D	INTACT	WHITE	HALL	H3	Negative	< LOD
1177	6/20/2022 13:06	DOOR	WOOD	A	INTACT	WHITE	HALL	H3	Negative	< LOD
1178	6/20/2022 13:06	TRIM	WOOD	A	INTACT	WHITE	HALL	H3	Negative	< LOD
1179	6/20/2022 13:06	BASEBOARD	WOOD	A	INTACT	WHITE	HALL	H3	Negative	< LOD
1180	6/20/2022 13:06	WALL	DRYWALL	A	INTACT	BEIGE	BATHROOM	H3	Negative	< LOD
1181	6/20/2022 13:07	WALL	DRYWALL	B	INTACT	BEIGE	BATHROOM	H3	Negative	< LOD
1182	6/20/2022 13:07	WALL	DRYWALL	C	INTACT	BEIGE	BATHROOM	H3	Negative	< LOD
1183	6/20/2022 13:07	WALL	DRYWALL	D	INTACT	BEIGE	BATHROOM	H3	Negative	< LOD
1184	6/20/2022 13:07	WALL	DRYWALL	D	INTACT	BEIGE	BATHROOM	H3	Negative	< LOD
1185	6/20/2022 13:08	CEILING	DRYWALL		INTACT	BEIGE	BATHROOM	H3	Negative	< LOD
1186	6/20/2022 13:08	DOOR	WOOD	A	INTACT	WHITE	BATHROOM	H3	Negative	< LOD
1187	6/20/2022 13:08	TRIM	WOOD	A	INTACT	WHITE	BATHROOM	H3	Negative	< LOD
1188	6/20/2022 13:08	jamb	WOOD	A	INTACT	WHITE	BATHROOM	H3	Negative	< LOD

Reading No	Time	Component	Substrate	Side	Condition	Color	Room	Unit	Results	Pb
1189	6/20/2022 13:09	BASEBOARD	WOOD	C	INTACT	WHITE	BATHROOM	H3	Negative	< LOD
1190	6/20/2022 13:09	CABINET	WOOD	D	INTACT	BROWN	BATHROOM	H3	Negative	< LOD
1191	6/20/2022 13:10	WALL	DRYWALL	A	INTACT	BEIGE	n bed	H3	Negative	< LOD
1192	6/20/2022 13:10	WALL	DRYWALL	B	INTACT	BEIGE	n bed	H3	Negative	< LOD
1193	6/20/2022 13:10	WALL	DRYWALL	C	INTACT	BEIGE	n bed	H3	Negative	< LOD
1194	6/20/2022 13:10	WALL	DRYWALL	D	INTACT	BEIGE	n bed	H3	Negative	< LOD
1195	6/20/2022 13:11	WINDOW	WOOD	A	INTACT	WHITE	n bed	H3	Negative	< LOD
1196	6/20/2022 13:11	BASEBOARD	WOOD	A	INTACT	WHITE	n bed	H3	Negative	< LOD
1197	6/20/2022 13:11	DOOR	WOOD	C	INTACT	WHITE	n bed	H3	Null	< LOD
1198	6/20/2022 13:11	DOOR	WOOD	C	INTACT	WHITE	n bed	H3	Negative	< LOD
1199	6/20/2022 13:11	TRIM	WOOD	C	INTACT	WHITE	n bed	H3	Negative	< LOD
1200	6/20/2022 13:12	jamb	WOOD	C	INTACT	WHITE	n bed	H3	Negative	< LOD
1201	6/20/2022 13:12	CEILING	DRYWALL		INTACT	WHITE	n bed	H3	Negative	< LOD
1202	6/20/2022 13:13	WALL	DRYWALL	A	INTACT	BEIGE	S BED	H3	Null	< LOD
1203	6/20/2022 13:13	WALL	DRYWALL	A	INTACT	BEIGE	S BED	H3	Negative	< LOD
1204	6/20/2022 13:13	WALL	DRYWALL	B	INTACT	BEIGE	S BED	H3	Negative	< LOD
1205	6/20/2022 13:13	WALL	DRYWALL	C	INTACT	BEIGE	S BED	H3	Negative	< LOD
1206	6/20/2022 13:14	WALL	DRYWALL	D	INTACT	BEIGE	S BED	H3	Negative	< LOD
1207	6/20/2022 13:14	CEILING	DRYWALL		INTACT	WHITE	S BED	H3	Negative	< LOD
1208	6/20/2022 13:14	WINDOW	WOOD	A	INTACT	WHITE	S BED	H3	Negative	< LOD
1209	6/20/2022 13:15	BASEBOARD	WOOD	D	INTACT	WHITE	S BED	H3	Negative	< LOD
1210	6/20/2022 13:15	DOOR	WOOD	C	INTACT	WHITE	S BED	H3	Negative	< LOD
1211	6/20/2022 13:15	TRIM	WOOD	C	INTACT	WHITE	S BED	H3	Negative	< LOD
1212	6/20/2022 13:15	JAMB	WOOD	C	INTACT	WHITE	S BED	H3	Negative	< LOD
1213	6/20/2022 13:20	WALL	DRYWALL	A	INTACT	BEIGE	e bed	I10	Negative	< LOD
1214	6/20/2022 13:20	WINDOW	WOOD	A	INTACT	WHITE	e bed	I10	Negative	< LOD
1215	6/20/2022 13:21	WINDOW	DRYWALL	B	INTACT	BEIGE	e bed	I10	Negative	< LOD
1216	6/20/2022 13:21	WINDOW	DRYWALL	C	INTACT	BEIGE	e bed	I10	Negative	< LOD
1217	6/20/2022 13:21	WINDOW	DRYWALL	D	INTACT	BEIGE	e bed	I10	Negative	< LOD
1218	6/20/2022 13:22	BASEBOARD	WOOD	C	INTACT	WHITE	e bed	I10	Negative	< LOD
1219	6/20/2022 13:22	DOOR	WOOD	C	INTACT	WHITE	e bed	I10	Negative	< LOD
1220	6/20/2022 13:22	TRIM	WOOD	C	INTACT	WHITE	e bed	I10	Negative	< LOD
1221	6/20/2022 13:22	jamb	WOOD	C	INTACT	WHITE	e bed	I10	Negative	< LOD

Reading No	Time	Component	Substrate	Side	Condition	Color	Room	Unit	Results	Pb
1222	6/20/2022 13:23	CEILING	DRYWALL		INTACT	WHITE	e bed	I10	Negative	< LOD
1223	6/20/2022 13:24	WALL	DRYWALL	A	INTACT	BEIGE	w bed	I10	Negative	< LOD
1224	6/20/2022 13:24	WALL	DRYWALL	B	INTACT	BEIGE	w bed	I10	Negative	< LOD
1225	6/20/2022 13:25	WALL	DRYWALL	C	INTACT	BEIGE	w bed	I10	Negative	< LOD
1226	6/20/2022 13:25	CEILING	DRYWALL		INTACT	WHITE	w bed	I10	Negative	< LOD
1227	6/20/2022 13:25	WALL	DRYWALL	D	INTACT	BEIGE	w bed	I10	Negative	< LOD
1228	6/20/2022 13:26	WINDOW	WOOD	A	INTACT	WHITE	w bed	I10	Negative	< LOD
1229	6/20/2022 13:26	DOOR	WOOD	C	INTACT	WHITE	w bed	I10	Negative	< LOD
1230	6/20/2022 13:26	TRIM	WOOD	C	INTACT	WHITE	w bed	I10	Negative	< LOD
1231	6/20/2022 13:27	jamb	WOOD	C	INTACT	WHITE	w bed	I10	Negative	< LOD
1232	6/20/2022 13:27	BASEBOARD	WOOD	C	INTACT	WHITE	w bed	I10	Negative	< LOD
1233	6/20/2022 13:27	WALL	DRYWALL	A	INTACT	BEIGE	HALL	I10	Negative	< LOD
1234	6/20/2022 13:28	WALL	DRYWALL	B	INTACT	BEIGE	HALL	I10	Negative	< LOD
1235	6/20/2022 13:28	WALL	DRYWALL	C	INTACT	BEIGE	HALL	I10	Negative	< LOD
1236	6/20/2022 13:28	WALL	DRYWALL	D	INTACT	BEIGE	HALL	I10	Negative	< LOD
1237	6/20/2022 13:28	DOOR	WOOD	A	INTACT	WHITE	HALL	I10	Negative	< LOD
1238	6/20/2022 13:28	TRIM	WOOD	A	INTACT	WHITE	HALL	I10	Negative	< LOD
1239	6/20/2022 13:29	CLOSET	WOOD	B	INTACT	WHITE	HALL	I10	Null	< LOD
1240	6/20/2022 13:29	CLOSET	WOOD	B	INTACT	WHITE	HALL	I10	Negative	< LOD
1241	6/20/2022 13:29	CEILING	DRYWALL		INTACT	WHITE	HALL	I10	Negative	< LOD
1242	6/20/2022 13:30	WALL	DRYWALL	A	INTACT	BEIGE	BATHROOM	I10	Negative	< LOD
1243	6/20/2022 13:30	WALL	DRYWALL	B	INTACT	BEIGE	BATHROOM	I10	Negative	< LOD
1244	6/20/2022 13:30	WALL	DRYWALL	C	INTACT	BEIGE	BATHROOM	I10	Negative	< LOD
1245	6/20/2022 13:30	WALL	DRYWALL	D	INTACT	BEIGE	BATHROOM	I10	Negative	< LOD
1246	6/20/2022 13:31	CEILING	DRYWALL		INTACT	BEIGE	BATHROOM	I10	Negative	< LOD
1247	6/20/2022 13:31	DOOR	WOOD	A	INTACT	WHITE	BATHROOM	I10	Negative	< LOD
1248	6/20/2022 13:31	TRIM	WOOD	A	INTACT	WHITE	BATHROOM	I10	Negative	< LOD
1249	6/20/2022 13:31	jamb	WOOD	A	INTACT	WHITE	BATHROOM	I10	Null	< LOD
1250	6/20/2022 13:31	jamb	WOOD	A	INTACT	WHITE	BATHROOM	I10	Negative	< LOD
1251	6/20/2022 13:32	CABINET	WOOD	B	INTACT	BROWN	BATHROOM	I10	Negative	< LOD
1252	6/20/2022 13:32	BASEBOARD	WOOD	A	INTACT	WHITE	BATHROOM	I10	Negative	< LOD
1253	6/20/2022 13:33	TRIM	DRYWALL	A	INTACT	BEIGE	KITCHEN	I10	Negative	< LOD
1254	6/20/2022 13:33	TRIM	DRYWALL	B	INTACT	BEIGE	KITCHEN	I10	Negative	< LOD

Reading No	Time	Component	Substrate	Side	Condition	Color	Room	Unit	Results	Pb
1255	6/20/2022 13:33	TRIM	DRYWALL	C	INTACT	BEIGE	KITCHEN	I10	Negative	< LOD
1256	6/20/2022 13:33	TRIM	DRYWALL	D	INTACT	BEIGE	KITCHEN	I10	Null	< LOD
1257	6/20/2022 13:33	TRIM	DRYWALL	D	INTACT	BEIGE	KITCHEN	I10	Negative	< LOD
1258	6/20/2022 13:34	CEILING	DRYWALL		INTACT	BEIGE	KITCHEN	I10	Negative	< LOD
1259	6/20/2022 13:34	BASEBOARD	WOOD	A	INTACT	WHITE	KITCHEN	I10	Negative	< LOD
1260	6/20/2022 13:34	CABINET	WOOD	B	INTACT	BROWN	KITCHEN	I10	Negative	< LOD
1261	6/20/2022 13:35	WALL	DRYWALL	A	INTACT	BEIGE	dining	I10	Negative	< LOD
1262	6/20/2022 13:35	WALL	DRYWALL	B	INTACT	BEIGE	dining	I10	Negative	< LOD
1263	6/20/2022 13:37	WALL	DRYWALL	C	INTACT	BEIGE	dining	I10	Negative	< LOD
1264	6/20/2022 13:37	WALL	DRYWALL	D	INTACT	BEIGE	dining	I10	Negative	< LOD
1265	6/20/2022 13:37	WINDOW	WOOD	C	INTACT	WHITE	dining	I10	Negative	< LOD
1266	6/20/2022 13:38	BASEBOARD	WOOD	A	INTACT	WHITE	dining	I10	Negative	< LOD
1267	6/20/2022 13:39	CEILING	DRYWALL		INTACT	WHITE	dining	I10	Negative	< LOD
1268	6/20/2022 13:39	WALL	DRYWALL	A	INTACT	BEIGE	LIVING ROOM	I10	Negative	< LOD
1269	6/20/2022 13:39	WALL	DRYWALL	B	INTACT	BEIGE	LIVING ROOM	I10	Negative	< LOD
1270	6/20/2022 13:40	WALL	DRYWALL	C	INTACT	BEIGE	LIVING ROOM	I10	Negative	< LOD
1271	6/20/2022 13:40	WALL	DRYWALL	D	INTACT	BEIGE	LIVING ROOM	I10	Negative	< LOD
1272	6/20/2022 13:40	BASEBOARD	WOOD	D	INTACT	WHITE	LIVING ROOM	I10	Negative	< LOD
1273	6/20/2022 13:40	TRIM	WOOD	C	INTACT	WHITE	LIVING ROOM	I10	Negative	< LOD
1274	6/20/2022 13:41	CEILING	DRYWALL		INTACT	WHITE	LIVING ROOM	I10	Negative	< LOD
1275	6/20/2022 13:53	WALL	DRYWALL	A	INTACT	BEIGE	HALL	I7	Negative	< LOD
1276	6/20/2022 13:53	WALL	DRYWALL	B	INTACT	BEIGE	HALL	I7	Negative	< LOD
1277	6/20/2022 13:53	WALL	DRYWALL	C	INTACT	BEIGE	HALL	I7	Negative	< LOD
1278	6/20/2022 13:54	WALL	DRYWALL	D	INTACT	BEIGE	HALL	I7	Negative	< LOD
1279	6/20/2022 13:54	CEILING	DRYWALL		INTACT	WHITE	HALL	I7	Negative	< LOD
1280	6/20/2022 13:55	DOOR	WOOD	A	INTACT	WHITE	HALL	I7	Negative	< LOD
1281	6/20/2022 13:55	TRIM	WOOD	A	INTACT	WHITE	HALL	I7	Negative	< LOD
1282	6/20/2022 13:55	CLOSET	WOOD	D	INTACT	WHITE	HALL	I7	Negative	< LOD
1283	6/20/2022 13:56	WALL	DRYWALL	A	INTACT	BEIGE	BATHROOM	I7	Negative	< LOD
1284	6/20/2022 13:56	WALL	DRYWALL	B	INTACT	BEIGE	BATHROOM	I7	Negative	< LOD
1285	6/20/2022 13:56	WALL	DRYWALL	C	INTACT	BEIGE	BATHROOM	I7	Negative	< LOD
1286	6/20/2022 13:56	WALL	DRYWALL	D	INTACT	BEIGE	BATHROOM	I7	Negative	< LOD
1287	6/20/2022 13:56	CEILING	DRYWALL		INTACT	BEIGE	BATHROOM	I7	Negative	< LOD

Reading No	Time	Component	Substrate	Side	Condition	Color	Room	Unit	Results	Pb
1288	6/20/2022 13:57	DOOR	WOOD	A	INTACT	WHITE	BATHROOM	I7	Negative	< LOD
1289	6/20/2022 13:57	TRIM	WOOD	A	INTACT	WHITE	BATHROOM	I7	Negative	< LOD
1290	6/20/2022 13:57	jamb	WOOD	A	INTACT	WHITE	BATHROOM	I7	Negative	< LOD
1291	6/20/2022 13:58	CABINET	WOOD	D	INTACT	BROWN	BATHROOM	I7	Negative	< LOD
1292	6/20/2022 13:58	BASEBOARD	WOOD	C	INTACT	WHITE	BATHROOM	I7	Negative	< LOD
1293	6/20/2022 13:58	BASEBOARD	WOOD	A	INTACT	WHITE	HALL	I7	Negative	< LOD
1294	6/20/2022 13:59	WALL	DRYWALL	A	INTACT	BEIGE	e bed	I7	Negative	< LOD
1295	6/20/2022 13:59	WALL	DRYWALL	B	INTACT	BEIGE	e bed	I7	Negative	< LOD
1296	6/20/2022 13:59	WALL	DRYWALL	C	INTACT	BEIGE	e bed	I7	Negative	< LOD
1297	6/20/2022 14:00	WALL	DRYWALL	D	INTACT	BEIGE	e bed	I7	Negative	< LOD
1298	6/20/2022 14:00	WINDOW	WOOD	A	INTACT	WHITE	e bed	I7	Negative	< LOD
1299	6/20/2022 14:00	DOOR	WOOD	C	INTACT	WHITE	e bed	I7	Negative	< LOD
1300	6/20/2022 14:01	TRIM	WOOD	C	INTACT	WHITE	e bed	I7	Negative	< LOD
1301	6/20/2022 14:01	jamb	WOOD	C	INTACT	WHITE	e bed	I7	Negative	< LOD
1302	6/20/2022 14:01	BASEBOARD	WOOD	D	INTACT	WHITE	e bed	I7	Negative	< LOD
1303	6/20/2022 14:02	CEILING	DRYWALL		INTACT	WHITE	e bed	I7	Negative	< LOD
1304	6/20/2022 14:02	WALL	DRYWALL	A	INTACT	BEIGE	w bed	I7	Negative	< LOD
1305	6/20/2022 14:03	WALL	DRYWALL	B	INTACT	BEIGE	w bed	I7	Negative	< LOD
1306	6/20/2022 14:03	WINDOW	WOOD	B	INTACT	WHITE	w bed	I7	Negative	< LOD
1307	6/20/2022 14:03	WALL	DRYWALL	C	INTACT	BEIGE	w bed	I7	Negative	< LOD
1308	6/20/2022 14:03	WALL	DRYWALL	D	INTACT	BEIGE	w bed	I7	Negative	< LOD
1309	6/20/2022 14:04	BASEBOARD	WOOD	D	INTACT	WHITE	w bed	I7	Negative	< LOD
1310	6/20/2022 14:04	DOOR	WOOD	C	INTACT	WHITE	w bed	I7	Negative	< LOD
1311	6/20/2022 14:04	TRIM	WOOD	C	INTACT	WHITE	w bed	I7	Negative	< LOD
1312	6/20/2022 14:04	jamb	WOOD	C	INTACT	WHITE	w bed	I7	Negative	< LOD
1313	6/20/2022 14:05	CEILING	DRYWALL		INTACT	WHITE	w bed	I7	Negative	< LOD
1314	6/20/2022 14:06	CEILING	DRYWALL		INTACT	WHITE	LIVING ROOM	I7	Null	< LOD
1315	6/20/2022 14:06	CEILING	DRYWALL		INTACT	WHITE	LIVING ROOM	I7	Null	< LOD
1316	6/20/2022 14:06	CEILING	DRYWALL		INTACT	WHITE	LIVING ROOM	I7	Null	< LOD
1317	6/20/2022 14:06	CEILING	DRYWALL		INTACT	WHITE	LIVING ROOM	I7	Negative	< LOD
1318	6/20/2022 14:07	WALL	DRYWALL	A	INTACT	BEIGE	LIVING ROOM	I7	Negative	< LOD
1319	6/20/2022 14:07	WALL	DRYWALL	B	INTACT	BEIGE	LIVING ROOM	I7	Negative	< LOD
1320	6/20/2022 14:07	WALL	DRYWALL	C	INTACT	BEIGE	LIVING ROOM	I7	Negative	< LOD

Reading No	Time	Component	Substrate	Side	Condition	Color	Room	Unit	Results	Pb
1321	6/20/2022 14:08	WALL	DRYWALL	D	INTACT	BEIGE	LIVING ROOM	I7	Negative	< LOD
1322	6/20/2022 14:08	BASEBOARD	WOOD	A	INTACT	WHITE	LIVING ROOM	I7	Negative	< LOD
1323	6/20/2022 14:08	TRIM	WOOD	C	INTACT	WHITE	LIVING ROOM	I7	Negative	< LOD
1324	6/20/2022 14:09	WALL	DRYWALL	A	INTACT	BEIGE	dining	I7	Negative	< LOD
1325	6/20/2022 14:09	WALL	DRYWALL	B	INTACT	BEIGE	dining	I7	Negative	< LOD
1326	6/20/2022 14:09	WALL	DRYWALL	C	INTACT	BEIGE	dining	I7	Negative	< LOD
1327	6/20/2022 14:10	WINDOW	WOOD	C	INTACT	WHITE	dining	I7	Negative	< LOD
1328	6/20/2022 14:10	BASEBOARD	WOOD	B	INTACT	WHITE	dining	I7	Negative	< LOD
1329	6/20/2022 14:10	WALL	DRYWALL	D	INTACT	BEIGE	dining	I7	Negative	< LOD
1330	6/20/2022 14:11	WALL	DRYWALL	D	INTACT	BEIGE	dining	I7	Negative	< LOD
1331	6/20/2022 14:11	WALL	DRYWALL	A	INTACT	BEIGE	KITCHEN	I7	Negative	< LOD
1332	6/20/2022 14:12	BASEBOARD	WOOD	A	INTACT	WHITE	KITCHEN	I7	Negative	< LOD
1333	6/20/2022 14:12	WALL	DRYWALL	B	INTACT	BEIGE	KITCHEN	I7	Negative	< LOD
1334	6/20/2022 14:12	WALL	DRYWALL	C	INTACT	BEIGE	KITCHEN	I7	Negative	< LOD
1335	6/20/2022 14:12	WALL	DRYWALL	D	INTACT	BEIGE	KITCHEN	I7	Negative	< LOD
1336	6/20/2022 14:13	CABINET	WOOD	D	INTACT	BROWN	KITCHEN	I7	Null	< LOD
1337	6/20/2022 14:13	CABINET	WOOD	D	INTACT	BROWN	KITCHEN	I7	Negative	< LOD
1338	6/20/2022 14:13	CEILING	DRYWALL		INTACT	BEIGE	KITCHEN	I7	Negative	< LOD
1339	6/20/2022 14:14	CEILING	DRYWALL		INTACT	WHITE	dining	I7	Negative	< LOD
1340	6/20/2022 14:19	WALL	DRYWALL	A	INTACT	BEIGE	w bed	I6	Negative	< LOD
1341	6/20/2022 14:19	WALL	DRYWALL	B	INTACT	BEIGE	w bed	I6	Negative	< LOD
1342	6/20/2022 14:20	WINDOW	WOOD	A	INTACT	WHITE	w bed	I6	Negative	< LOD
1343	6/20/2022 14:20	BASEBOARD	WOOD	B	INTACT	WHITE	w bed	I6	Negative	< LOD
1344	6/20/2022 14:20	WALL	DRYWALL	B	INTACT	BEIGE	w bed	I6	Negative	< LOD
1345	6/20/2022 14:21	WALL	DRYWALL	C	INTACT	BEIGE	w bed	I6	Negative	< LOD
1346	6/20/2022 14:21	WALL	DRYWALL	D	INTACT	BEIGE	w bed	I6	Negative	< LOD
1347	6/20/2022 14:21	DOOR	WOOD	C	INTACT	WHITE	w bed	I6	Negative	< LOD
1348	6/20/2022 14:21	TRIM	WOOD	C	INTACT	WHITE	w bed	I6	Negative	< LOD
1349	6/20/2022 14:21	jamb	WOOD	C	INTACT	WHITE	w bed	I6	Negative	< LOD
1350	6/20/2022 14:22	CEILING	DRYWALL		INTACT	WHITE	w bed	I6	Null	< LOD
1351	6/20/2022 14:22	CEILING	DRYWALL		INTACT	WHITE	w bed	I6	Negative	< LOD
1352	6/20/2022 14:23	WALL	DRYWALL	A	INTACT	BEIGE	e bed	I6	Negative	< LOD
1353	6/20/2022 14:23	WALL	DRYWALL	B	INTACT	BEIGE	e bed	I6	Negative	< LOD

Reading No	Time	Component	Substrate	Side	Condition	Color	Room	Unit	Results	Pb
1354	6/20/2022 14:23	WALL	DRYWALL	C	INTACT	BEIGE	e bed	I6	Negative	< LOD
1355	6/20/2022 14:24	WALL	DRYWALL	D	INTACT	BEIGE	e bed	I6	Negative	< LOD
1356	6/20/2022 14:24	WINDOW	WOOD	A	INTACT	WHITE	e bed	I6	Negative	< LOD
1357	6/20/2022 14:24	BASEBOARD	WOOD	A	INTACT	WHITE	e bed	I6	Negative	< LOD
1358	6/20/2022 14:24	DOOR	WOOD	C	INTACT	WHITE	e bed	I6	Negative	< LOD
1359	6/20/2022 14:25	TRIM	WOOD	C	INTACT	WHITE	e bed	I6	Negative	< LOD
1360	6/20/2022 14:25	jamb	WOOD	C	INTACT	WHITE	e bed	I6	Negative	< LOD
1361	6/20/2022 14:25	CEILING	DRYWALL		INTACT	WHITE	e bed	I6	Negative	< LOD
1362	6/20/2022 14:26	WALL	DRYWALL	A	INTACT	BEIGE	BATHROOM	I6	Negative	< LOD
1363	6/20/2022 14:26	WALL	DRYWALL	B	INTACT	BEIGE	BATHROOM	I6	Negative	< LOD
1364	6/20/2022 14:26	WALL	DRYWALL	C	INTACT	BEIGE	BATHROOM	I6	Negative	< LOD
1365	6/20/2022 14:26	WALL	DRYWALL	D	INTACT	BEIGE	BATHROOM	I6	Negative	< LOD
1366	6/20/2022 14:27	CEILING	DRYWALL		INTACT	BEIGE	BATHROOM	I6	Negative	< LOD
1367	6/20/2022 14:27	DOOR	WOOD	A	INTACT	WHITE	BATHROOM	I6	Negative	< LOD
1368	6/20/2022 14:27	TRIM	WOOD	A	INTACT	WHITE	BATHROOM	I6	Negative	< LOD
1369	6/20/2022 14:27	jamb	WOOD	A	INTACT	WHITE	BATHROOM	I6	Negative	< LOD
1370	6/20/2022 14:28	CABINET	WOOD	B	INTACT	BROWN	BATHROOM	I6	Negative	< LOD
1371	6/20/2022 14:28	BASEBOARD	WOOD	C	INTACT	WHITE	BATHROOM	I6	Negative	< LOD
1372	6/20/2022 14:28	WALL	DRYWALL	A	INTACT	BEIGE	HALL	I6	Negative	< LOD
1373	6/20/2022 14:29	WALL	DRYWALL	B	INTACT	BEIGE	HALL	I6	Negative	< LOD
1374	6/20/2022 14:29	CEILING	DRYWALL		INTACT	WHITE	HALL	I6	Negative	< LOD
1375	6/20/2022 14:29	WALL	DRYWALL	C	INTACT	BEIGE	HALL	I6	Negative	< LOD
1376	6/20/2022 14:29	WALL	DRYWALL	D	INTACT	BEIGE	HALL	I6	Negative	< LOD
1377	6/20/2022 14:30	DOOR	WOOD	A	INTACT	WHITE	HALL	I6	Negative	< LOD
1378	6/20/2022 14:30	TRIM	WOOD	A	INTACT	WHITE	HALL	I6	Negative	< LOD
1379	6/20/2022 14:30	BASEBOARD	WOOD	A	INTACT	WHITE	HALL	I6	Negative	< LOD
1380	6/20/2022 14:30	CLOSET	WOOD	B	INTACT	WHITE	HALL	I6	Negative	< LOD
1381	6/20/2022 14:31	WALL	DRYWALL	A	INTACT	BEIGE	KITCHEN	I6	Null	< LOD
1382	6/20/2022 14:31	WALL	DRYWALL	A	INTACT	BEIGE	KITCHEN	I6	Negative	< LOD
1383	6/20/2022 14:31	WALL	DRYWALL	B	INTACT	BEIGE	KITCHEN	I6	Negative	< LOD
1384	6/20/2022 14:32	WALL	DRYWALL	C	INTACT	BEIGE	KITCHEN	I6	Negative	< LOD
1385	6/20/2022 14:32	WALL	DRYWALL	D	INTACT	BEIGE	KITCHEN	I6	Negative	< LOD
1386	6/20/2022 14:32	CEILING	DRYWALL		INTACT	BEIGE	KITCHEN	I6	Negative	< LOD

Reading No	Time	Component	Substrate	Side	Condition	Color	Room	Unit	Results	Pb
1387	6/20/2022 14:33	BASEBOARD	WOOD	A	INTACT	WHITE	KITCHEN	I6	Negative	< LOD
1388	6/20/2022 14:33	CEILING	WOOD	B	INTACT	BROWN	KITCHEN	I6	Negative	< LOD
1389	6/20/2022 14:33	WALL	DRYWALL	A	INTACT	BEIGE	dining	I6	Negative	< LOD
1390	6/20/2022 14:34	WALL	DRYWALL	B	INTACT	BEIGE	dining	I6	Negative	< LOD
1391	6/20/2022 14:34	WALL	DRYWALL	C	INTACT	BEIGE	dining	I6	Negative	< LOD
1392	6/20/2022 14:34	WALL	DRYWALL	D	INTACT	BEIGE	dining	I6	Negative	< LOD
1393	6/20/2022 14:35	CEILING	DRYWALL		INTACT	WHITE	dining	I6	Negative	< LOD
1394	6/20/2022 14:35	WINDOW	WOOD	C	INTACT	WHITE	dining	I6	Negative	< LOD
1395	6/20/2022 14:35	BASEBOARD	WOOD	A	INTACT	WHITE	dining	I6	Negative	< LOD
1396	6/20/2022 14:36	WALL	DRYWALL	A	INTACT	BEIGE	LIVING ROOM	I6	Negative	< LOD
1397	6/20/2022 14:36	WALL	DRYWALL	B	INTACT	BEIGE	LIVING ROOM	I6	Negative	< LOD
1398	6/20/2022 14:36	WALL	DRYWALL	C	INTACT	BEIGE	LIVING ROOM	I6	Negative	< LOD
1399	6/20/2022 14:37	WALL	DRYWALL	D	INTACT	BEIGE	LIVING ROOM	I6	Negative	< LOD
1400	6/20/2022 14:37	BASEBOARD	WOOD	D	INTACT	WHITE	LIVING ROOM	I6	Negative	< LOD
1401	6/20/2022 14:37	WALL	WOOD	C	INTACT	WHITE	LIVING ROOM	I6	Negative	< LOD
1402	6/20/2022 14:38	CEILING	DRYWALL		INTACT	WHITE	LIVING ROOM	I6	Null	< LOD
1403	6/20/2022 14:38	CEILING	DRYWALL		INTACT	WHITE	LIVING ROOM	I6	Negative	< LOD
1404	6/20/2022 14:39	sofit	WOOD	C	INTACT	YELLOW	OUTSIDE	I6	Negative	< LOD
1405	6/20/2022 14:39	fascia	WOOD	C	INTACT	BROWN	OUTSIDE	I6	Negative	< LOD
1406	6/20/2022 14:41	stringer	WOOD	A	INTACT	YELLOW	OUTSIDE	I6	Negative	< LOD
1407	6/20/2022 14:47	WALL	DRYWALL	A	INTACT	BEIGE	KITCHEN	I9	Negative	< LOD
1408	6/20/2022 14:47	WALL	DRYWALL	B	INTACT	BEIGE	KITCHEN	I9	Negative	< LOD
1409	6/20/2022 14:47	WALL	DRYWALL	C	INTACT	BEIGE	KITCHEN	I9	Negative	< LOD
1410	6/20/2022 14:48	WALL	DRYWALL	D	INTACT	BEIGE	KITCHEN	I9	Negative	< LOD
1411	6/20/2022 14:48	BASEBOARD	WOOD	A	INTACT	WHITE	KITCHEN	I9	Negative	< LOD
1412	6/20/2022 14:48	CABINET	WOOD	B	INTACT	BROWN	KITCHEN	I9	Negative	< LOD
1413	6/20/2022 14:49	CEILING	DRYWALL		INTACT	BEIGE	KITCHEN	I9	Negative	< LOD
1414	6/20/2022 14:50	WALL	DRYWALL	A	INTACT	BEIGE	dining	I9	Negative	< LOD
1415	6/20/2022 14:50	WALL	DRYWALL	B	INTACT	BEIGE	dining	I9	Negative	< LOD
1416	6/20/2022 14:50	WALL	DRYWALL	C	INTACT	BEIGE	dining	I9	Negative	< LOD
1417	6/20/2022 14:51	WALL	DRYWALL	D	INTACT	BEIGE	dining	I9	Null	< LOD
1418	6/20/2022 14:51	WALL	DRYWALL	D	INTACT	BEIGE	dining	I9	Negative	< LOD
1419	6/20/2022 14:51	CEILING	DRYWALL		INTACT	WHITE	dining	I9	Negative	< LOD

Reading No	Time	Component	Substrate	Side	Condition	Color	Room	Unit	Results	Pb
1420	6/20/2022 14:52	BASEBOARD	WOOD	A	INTACT	WHITE	dining	I9	Negative	< LOD
1421	6/20/2022 14:52	WINDOW	WOOD	C	INTACT	WHITE	dining	I9	Negative	< LOD
1422	6/20/2022 14:52	WALL	DRYWALL	A	INTACT	BEIGE	LIVING ROOM	I9	Negative	< LOD
1423	6/20/2022 14:53	WALL	DRYWALL	B	INTACT	BEIGE	LIVING ROOM	I9	Negative	< LOD
1424	6/20/2022 14:53	WALL	DRYWALL	C	INTACT	BEIGE	LIVING ROOM	I9	Negative	< LOD
1425	6/20/2022 14:53	WALL	DRYWALL	D	INTACT	BEIGE	LIVING ROOM	I9	Negative	< LOD
1426	6/20/2022 14:53	CEILING	DRYWALL		INTACT	WHITE	LIVING ROOM	I9	Negative	< LOD
1427	6/20/2022 14:54	BASEBOARD	WOOD	A	INTACT	WHITE	LIVING ROOM	I9	Negative	< LOD
1428	6/20/2022 14:54	TRIM	WOOD	C	INTACT	WHITE	LIVING ROOM	I9	Negative	< LOD
1429	6/20/2022 14:55	WALL	DRYWALL	A	INTACT	BEIGE	HALL	I9	Negative	< LOD
1430	6/20/2022 14:55	WALL	DRYWALL	B	INTACT	BEIGE	HALL	I9	Negative	< LOD
1431	6/20/2022 14:55	CEILING	DRYWALL		INTACT	WHITE	HALL	I9	Negative	< LOD
1432	6/20/2022 14:56	WALL	DRYWALL	C	INTACT	BEIGE	HALL	I9	Negative	< LOD
1433	6/20/2022 14:56	WALL	DRYWALL	D	INTACT	BEIGE	HALL	I9	Negative	< LOD
1434	6/20/2022 14:56	DOOR	WOOD	A	INTACT	WHITE	HALL	I9	Negative	< LOD
1435	6/20/2022 14:56	TRIM	WOOD	A	INTACT	WHITE	HALL	I9	Negative	< LOD
1436	6/20/2022 14:56	BASEBOARD	WOOD	A	INTACT	WHITE	HALL	I9	Negative	< LOD
1437	6/20/2022 14:57	CLOSET	WOOD	B	INTACT	WHITE	HALL	I9	Negative	< LOD
1438	6/20/2022 14:57	WALL	DRYWALL	A	INTACT	BEIGE	BATHROOM	I9	Negative	< LOD
1439	6/20/2022 14:57	WALL	DRYWALL	B	INTACT	BEIGE	BATHROOM	I9	Negative	< LOD
1440	6/20/2022 14:58	WALL	DRYWALL	C	INTACT	BEIGE	BATHROOM	I9	Null	< LOD
1441	6/20/2022 14:58	WALL	DRYWALL	C	INTACT	BEIGE	BATHROOM	I9	Negative	< LOD
1442	6/20/2022 14:58	WALL	DRYWALL	D	INTACT	BEIGE	BATHROOM	I9	Null	< LOD
1443	6/20/2022 14:58	WALL	DRYWALL	D	INTACT	BEIGE	BATHROOM	I9	Negative	< LOD
1444	6/20/2022 14:59	CEILING	DRYWALL		INTACT	BEIGE	BATHROOM	I9	Negative	< LOD
1445	6/20/2022 14:59	DOOR	WOOD	A	INTACT	WHITE	BATHROOM	I9	Negative	< LOD
1446	6/20/2022 14:59	TRIM	WOOD	A	INTACT	WHITE	BATHROOM	I9	Negative	< LOD
1447	6/20/2022 14:59	jamb	WOOD	A	INTACT	WHITE	BATHROOM	I9	Negative	< LOD
1448	6/20/2022 15:00	CABINET	WOOD	B	INTACT	BROWN	BATHROOM	I9	Negative	< LOD
1449	6/20/2022 15:00	BASEBOARD	WOOD	D	INTACT	WHITE	BATHROOM	I9	Negative	< LOD
1450	6/20/2022 15:01	WALL	DRYWALL	A	INTACT	BEIGE	w bed	I9	Negative	< LOD
1451	6/20/2022 15:01	WINDOW	WOOD	A	INTACT	WHITE	w bed	I9	Negative	< LOD
1452	6/20/2022 15:02	WALL	DRYWALL	B	INTACT	BEIGE	w bed	I9	Negative	< LOD

Reading No	Time	Component	Substrate	Side	Condition	Color	Room	Unit	Results	Pb
1453	6/20/2022 15:02	WALL	DRYWALL	B	INTACT	BEIGE	w bed	I9	Negative	< LOD
1454	6/20/2022 15:02	WALL	DRYWALL	B	INTACT	BEIGE	w bed	I9	Negative	< LOD
1455	6/20/2022 15:03	WALL	DRYWALL	C	INTACT	BEIGE	w bed	I9	Negative	< LOD
1456	6/20/2022 15:03	WALL	DRYWALL	D	INTACT	BEIGE	w bed	I9	Negative	< LOD
1457	6/20/2022 15:03	DOOR	WOOD	C	INTACT	WHITE	w bed	I9	Negative	< LOD
1458	6/20/2022 15:03	TRIM	WOOD	C	INTACT	WHITE	w bed	I9	Negative	< LOD
1459	6/20/2022 15:04	jamb	WOOD	C	INTACT	WHITE	w bed	I9	Negative	< LOD
1460	6/20/2022 15:04	BASEBOARD	WOOD	C	INTACT	WHITE	w bed	I9	Negative	< LOD
1461	6/20/2022 15:05	CEILING	DRYWALL		INTACT	WHITE	w bed	I9	Negative	< LOD
1462	6/20/2022 15:05	WALL	DRYWALL	A	INTACT	BEIGE	e bed	I9	Negative	< LOD
1463	6/20/2022 15:05	WINDOW	WOOD	A	INTACT	WHITE	e bed	I9	Negative	< LOD
1464	6/20/2022 15:06	WALL	DRYWALL	D	INTACT	BEIGE	e bed	I9	Negative	< LOD
1465	6/20/2022 15:06	WALL	DRYWALL	B	INTACT	BEIGE	e bed	I9	Negative	< LOD
1466	6/20/2022 15:06	WALL	DRYWALL	C	INTACT	BEIGE	e bed	I9	Null	< LOD
1467	6/20/2022 15:07	WALL	DRYWALL	C	INTACT	BEIGE	e bed	I9	Negative	< LOD
1468	6/20/2022 15:07	BASEBOARD	WOOD	C	INTACT	WHITE	e bed	I9	Negative	< LOD
1469	6/20/2022 15:07	DOOR	WOOD	C	INTACT	WHITE	e bed	I9	Negative	< LOD
1470	6/20/2022 15:07	TRIM	WOOD	C	INTACT	WHITE	e bed	I9	Negative	< LOD
1471	6/20/2022 15:07	jamb	WOOD	C	INTACT	WHITE	e bed	I9	Negative	< LOD
1472	6/20/2022 15:08	CEILING	DRYWALL		INTACT	WHITE	e bed	I9	Negative	< LOD
1473	6/20/2022 15:12	WALL	DRYWALL	A	INTACT	BEIGE	HALL	I3	Negative	< LOD
1474	6/20/2022 15:12	WALL	DRYWALL	B	INTACT	BEIGE	HALL	I3	Null	< LOD
1475	6/20/2022 15:12	WALL	DRYWALL	B	INTACT	BEIGE	HALL	I3	Negative	< LOD
1476	6/20/2022 15:12	WALL	DRYWALL	C	INTACT	BEIGE	HALL	I3	Negative	< LOD
1477	6/20/2022 15:13	WALL	DRYWALL	D	INTACT	BEIGE	HALL	I3	Null	< LOD
1478	6/20/2022 15:13	WALL	DRYWALL	D	INTACT	BEIGE	HALL	I3	Negative	< LOD
1479	6/20/2022 15:14	CEILING	DRYWALL	D	INTACT	WHITE	HALL	I3	Negative	< LOD
1480	6/20/2022 15:14	DOOR	WOOD	A	INTACT	WHITE	HALL	I3	Negative	< LOD
1481	6/20/2022 15:14	TRIM	WOOD	A	INTACT	WHITE	HALL	I3	Negative	< LOD
1482	6/20/2022 15:14	CLOSET	WOOD	D	INTACT	WHITE	HALL	I3	Negative	< LOD
1483	6/20/2022 15:15	WALL	DRYWALL	A	INTACT	BEIGE	BATHROOM	I3	Negative	< LOD
1484	6/20/2022 15:15	WALL	DRYWALL	B	INTACT	BEIGE	BATHROOM	I3	Negative	< LOD
1485	6/20/2022 15:15	WALL	DRYWALL	C	INTACT	BEIGE	BATHROOM	I3	Negative	< LOD

Reading No	Time	Component	Substrate	Side	Condition	Color	Room	Unit	Results	Pb
1486	6/20/2022 15:15	WALL	DRYWALL	D	INTACT	BEIGE	BATHROOM	I3	Negative	< LOD
1487	6/20/2022 15:16	CEILING	DRYWALL		INTACT	BEIGE	BATHROOM	I3	Negative	< LOD
1488	6/20/2022 15:16	DOOR	WOOD	A	INTACT	WHITE	BATHROOM	I3	Negative	< LOD
1489	6/20/2022 15:16	TRIM	WOOD	A	INTACT	WHITE	BATHROOM	I3	Negative	< LOD
1490	6/20/2022 15:17	jamb	WOOD	A	INTACT	WHITE	BATHROOM	I3	Negative	< LOD
1491	6/20/2022 15:17	BASEBOARD	WOOD	C	INTACT	WHITE	BATHROOM	I3	Negative	< LOD
1492	6/20/2022 15:17	CABINET	WOOD	D	INTACT	BROWN	BATHROOM	I3	Negative	< LOD
1493	6/20/2022 15:18	WALL	DRYWALL	A	INTACT	BEIGE	e bed	I3	Negative	< LOD
1494	6/20/2022 15:19	WALL	DRYWALL	B	INTACT	BEIGE	e bed	I3	Negative	< LOD
1495	6/20/2022 15:19	WALL	DRYWALL	C	INTACT	BEIGE	e bed	I3	Negative	< LOD
1496	6/20/2022 15:19	WALL	DRYWALL	D	INTACT	BEIGE	e bed	I3	Negative	< LOD
1497	6/20/2022 15:20	CEILING	DRYWALL		INTACT	WHITE	e bed	I3	Negative	< LOD
1498	6/20/2022 15:20	WINDOW	WOOD	A	INTACT	WHITE	e bed	I3	Negative	< LOD
1499	6/20/2022 15:20	DOOR	WOOD	C	INTACT	WHITE	e bed	I3	Negative	< LOD
1500	6/20/2022 15:20	TRIM	WOOD	C	INTACT	WHITE	e bed	I3	Negative	< LOD
1501	6/20/2022 15:21	jamb	WOOD	C	INTACT	WHITE	e bed	I3	Negative	< LOD
1502	6/20/2022 15:22	WALL	DRYWALL	A	INTACT	BEIGE	w bed	I3	Negative	< LOD
1503	6/20/2022 15:22	WALL	DRYWALL	B	INTACT	BEIGE	w bed	I3	Negative	< LOD
1504	6/20/2022 15:22	WALL	DRYWALL	C	INTACT	BEIGE	w bed	I3	Null	< LOD
1505	6/20/2022 15:22	WALL	DRYWALL	C	INTACT	BEIGE	w bed	I3	Negative	< LOD
1506	6/20/2022 15:22	WALL	DRYWALL	D	INTACT	BEIGE	w bed	I3	Negative	< LOD
1507	6/20/2022 15:23	CEILING	DRYWALL		INTACT	WHITE	w bed	I3	Negative	< LOD
1508	6/20/2022 15:23	WINDOW	WOOD	A	INTACT	WHITE	w bed	I3	Negative	< LOD
1509	6/20/2022 15:24	BASEBOARD	WOOD	A	INTACT	WHITE	w bed	I3	Negative	< LOD
1510	6/20/2022 15:24	DOOR	WOOD	C	INTACT	WHITE	w bed	I3	Negative	< LOD
1511	6/20/2022 15:24	TRIM	WOOD	C	INTACT	WHITE	w bed	I3	Negative	< LOD
1512	6/20/2022 15:24	jamb	WOOD	C	INTACT	WHITE	w bed	I3	Negative	< LOD
1513	6/20/2022 15:25	WALL	DRYWALL	A	INTACT	BEIGE	KITCHEN	I3	Negative	< LOD
1514	6/20/2022 15:25	WALL	DRYWALL	B	INTACT	BEIGE	KITCHEN	I3	Negative	< LOD
1515	6/20/2022 15:26	WALL	DRYWALL	C	INTACT	BEIGE	KITCHEN	I3	Null	< LOD
1516	6/20/2022 15:26	WALL	DRYWALL	C	INTACT	BEIGE	KITCHEN	I3	Negative	< LOD
1517	6/20/2022 15:26	WALL	DRYWALL	D	INTACT	BEIGE	KITCHEN	I3	Negative	< LOD
1518	6/20/2022 15:26	CEILING	DRYWALL		INTACT	BEIGE	KITCHEN	I3	Negative	< LOD

Reading No	Time	Component	Substrate	Side	Condition	Color	Room	Unit	Results	Pb
1519	6/20/2022 15:27	BASEBOARD	WOOD	A	INTACT	WHITE	KITCHEN	I3	Negative	< LOD
1520	6/20/2022 15:27	CABINET	WOOD	B	INTACT	BROWN	KITCHEN	I3	Negative	< LOD
1521	6/20/2022 15:28	WALL	DRYWALL	A	INTACT	BEIGE	dining	I3	Negative	< LOD
1522	6/20/2022 15:28	WALL	DRYWALL	B	INTACT	BEIGE	dining	I3	Negative	< LOD
1523	6/20/2022 15:28	WALL	DRYWALL	C	INTACT	BEIGE	dining	I3	Negative	< LOD
1524	6/20/2022 15:28	WALL	DRYWALL	D	INTACT	BEIGE	dining	I3	Negative	< LOD
1525	6/20/2022 15:29	CEILING	DRYWALL		INTACT	WHITE	dining	I3	Null	< LOD
1526	6/20/2022 15:29	CEILING	DRYWALL		INTACT	WHITE	dining	I3	Negative	< LOD
1527	6/20/2022 15:29	WINDOW	WOOD	C	INTACT	WHITE	dining	I3	Negative	< LOD
1528	6/20/2022 15:29	BASEBOARD	WOOD	A	INTACT	WHITE	dining	I3	Negative	< LOD
1529	6/20/2022 15:30	WALL	DRYWALL	A	INTACT	BEIGE	LIVING ROOM	I3	Negative	< LOD
1530	6/20/2022 15:30	WALL	DRYWALL	B	INTACT	BEIGE	LIVING ROOM	I3	Negative	< LOD
1531	6/20/2022 15:30	WALL	DRYWALL	C	INTACT	BEIGE	LIVING ROOM	I3	Negative	< LOD
1532	6/20/2022 15:31	WALL	DRYWALL	D	INTACT	BEIGE	LIVING ROOM	I3	Negative	< LOD
1533	6/20/2022 15:31	CEILING	DRYWALL		INTACT	WHITE	LIVING ROOM	I3	Negative	< LOD
1534	6/20/2022 15:32	BASEBOARD	WOOD	B	INTACT	WHITE	LIVING ROOM	I3	Negative	< LOD
1535	6/20/2022 15:32	TRIM	WOOD	C	INTACT	WHITE	LIVING ROOM	I3	Negative	< LOD
1536	6/20/2022 15:33	nist	WOOD	C	INTACT	RED	LIVING ROOM	I3	Negative	0.8
1537	6/20/2022 15:34	nist	WOOD	C	INTACT	RED	LIVING ROOM	I3	Negative	0.7
1538	6/20/2022 15:34	nist	WOOD	C	INTACT	RED	LIVING ROOM	I3	Negative	0.8
1539	6/20/2022 15:34	nist	WOOD	C	INTACT	RED	LIVING ROOM	I3	Negative	0.6
1540	6/20/2022 15:34	nist	WOOD	C	INTACT	RED	LIVING ROOM	I3	Negative	0.8
1541	6/20/2022 15:35	nist	WOOD	C	INTACT	RED	LIVING ROOM	I3	Negative	0.8
1542	6/20/2022 15:35	nist	WOOD	C	INTACT	RED	LIVING ROOM	I3	Negative	0.8
1543	6/23/2022 8:21									7.23
1544	6/23/2022 8:21	nist				RED			Negative	0.7
1545	6/23/2022 8:22	nist				RED			Positive	1
1546	6/23/2022 8:23	nist				RED			Negative	0.9
1547	6/23/2022 8:23	nist				RED			Negative	0.7
1548	6/23/2022 8:23	nist				RED			Negative	0.6
1549	6/23/2022 8:23	nist				RED			Negative	0.7
1550	6/23/2022 8:23	nist				RED			Negative	0.7
1551	6/23/2022 8:24	nist				RED			Negative	0.9

Reading No	Time	Component	Substrate	Side	Condition	Color	Room	Unit	Results	Pb
1552	6/23/2022 8:24	nist				RED			Negative	0.9
1553	6/23/2022 8:25	nist				RED			Negative	0.8
1554	6/23/2022 8:36	soffit	WOOD	C	INTACT	YELLOW		bldg a	Negative	< LOD
1555	6/23/2022 8:37	fascia	WOOD	C	INTACT	BROWN		bldg a	Negative	< LOD
1556	6/23/2022 8:38	stringer	WOOD	A	INTACT	YELLOW		bldg a	Negative	< LOD
1557	6/23/2022 8:40	soffit	WOOD	C	INTACT	YELLOW		bldg b	Negative	< LOD
1558	6/23/2022 8:41	fascia	WOOD	C	INTACT	BROWN		bldg b	Negative	< LOD
1559	6/23/2022 8:41	stringer	WOOD	A	INTACT	YELLOW		bldg b	Negative	< LOD
1560	6/23/2022 8:44	fascia	WOOD	C	INTACT	YELLOW		bldg c	Negative	< LOD
1561	6/23/2022 8:45	soffit	WOOD	C	INTACT	YELLOW		bldg c	Negative	< LOD
1562	6/23/2022 8:45	fascia	WOOD	C	INTACT	YELLOW		bldg c	Negative	< LOD
1563	6/23/2022 8:46	stringer	WOOD	A	INTACT	YELLOW		bldg c	Negative	< LOD
1564	6/23/2022 8:47	fascia	WOOD	D	INTACT	BROWN		bldg d	Negative	< LOD
1565	6/23/2022 8:47	soffit	WOOD	D	INTACT	YELLOW		bldg d	Negative	< LOD
1566	6/23/2022 8:48	STRINGER	METAL	D	INTACT	YELLOW		bldg d	Negative	< LOD
1567	6/23/2022 8:51	SOFFIT	WOOD	C	INTACT	YELLOW		bldg E	Negative	< LOD
1568	6/23/2022 8:51	FASCIA	WOOD	C	INTACT	BROWN		bldg E	Negative	< LOD
1569	6/23/2022 8:52	STRINGER	WOOD	A	INTACT	YELLOW		bldg E	Negative	< LOD
1570	6/23/2022 8:55	FASCIA	WOOD	C	INTACT	BROWN		bldg H	Negative	< LOD
1571	6/23/2022 8:55	SOFFIT BEAM	WOOD	C	INTACT	YELLOW		bldg H	Negative	< LOD
1572	6/23/2022 8:56	STRINGER	WOOD	A	INTACT	YELLOW		bldg H	Negative	< LOD
1573	6/23/2022 8:59	NIST			INTACT	RED			Negative	0.9
1574	6/23/2022 8:59	NIST			INTACT	RED			Negative	0.9
1575	6/23/2022 9:00	NIST			INTACT	RED			Negative	0.9
1576	6/24/2022 13:57									6.71

Lead-Based Paint Inspection XRF Data
Inspection Date: 07/05/2022

Reading No	Time	Component	Substrate	Side	Condition	Color	Floor	Room	Misc 1	Results	Pb
1	7/5/2022 10:48										5.7
2	7/5/2022 10:49	nist				RED				Positive	1.2
3	7/5/2022 10:49	nist				RED				Negative	0.9
4	7/5/2022 10:49	nist				RED				Negative	0.9
5	7/5/2022 10:54	WALL	DRYWALL	A	INTACT	BEIGE		clubhouse		Negative	< LOD
6	7/5/2022 10:54	WALL	DRYWALL	B	INTACT	BEIGE		clubhouse		Null	< LOD
7	7/5/2022 10:54	WALL	DRYWALL	B	INTACT	BEIGE		clubhouse		Negative	< LOD
8	7/5/2022 10:54	WALL	DRYWALL	B	INTACT	BEIGE		clubhouse		Negative	< LOD
9	7/5/2022 10:55	WALL	DRYWALL	C	INTACT	BEIGE		clubhouse		Negative	< LOD
10	7/5/2022 10:55	WALL	DRYWALL	D	INTACT	BEIGE		clubhouse		Negative	< LOD
11	7/5/2022 10:56	FIREPLACE	brick	A	INTACT	BROWN		clubhouse		Negative	< LOD
12	7/5/2022 10:56	CABINET	WOOD	A	INTACT	BROWN		clubhouse		Negative	< LOD
13	7/5/2022 10:57	DOOR	WOOD	A	INTACT	WHITE		clubhouse		Negative	< LOD
14	7/5/2022 10:57	TRIM	WOOD	A	INTACT	WHITE		clubhouse		Negative	< LOD
15	7/5/2022 10:57	WINDOW	WOOD	B	INTACT	WHITE		clubhouse		Negative	< LOD
16	7/5/2022 10:57	WINDOW	WOOD	B	INTACT	WHITE		clubhouse		Negative	< LOD
17	7/5/2022 10:57	BASEBOARD	WOOD	B	INTACT	WHITE		clubhouse		Negative	< LOD
18	7/5/2022 10:58	CEILING	WOOD		INTACT	WHITE		clubhouse		Negative	< LOD
19	7/5/2022 10:59	soffit	WOOD	C	INTACT	YELLOW		clubhouse		Negative	< LOD
20	7/5/2022 11:00	fascia	WOOD	C	INTACT	BROWN		clubhouse		Negative	< LOD
21	7/5/2022 11:01	WALL	DRYWALL	A	INTACT	BEIGE	BASEMENT	clubhouse		Negative	< LOD
22	7/5/2022 11:01	WALL	DRYWALL	B	INTACT	BEIGE	BASEMENT	clubhouse		Negative	< LOD
23	7/5/2022 11:01	WALL	DRYWALL	C	INTACT	BEIGE	BASEMENT	clubhouse		Negative	< LOD
24	7/5/2022 11:02	WALL	DRYWALL	D	INTACT	BEIGE	BASEMENT	clubhouse		Negative	< LOD
25	7/5/2022 11:02	WINDOW	WOOD	C	INTACT	WHITE	BASEMENT	clubhouse		Negative	< LOD
26	7/5/2022 11:02	TRIM	WOOD	C	INTACT	WHITE	BASEMENT	clubhouse		Negative	< LOD
27	7/5/2022 11:02	BASEBOARD	WOOD	C	INTACT	WHITE	BASEMENT	clubhouse		Negative	< LOD
28	7/5/2022 11:03	FIREPLACE	brick	A	INTACT	BEIGE	BASEMENT	clubhouse		Negative	< LOD
29	7/5/2022 11:05	CEILING	DRYWALL		INTACT	WHITE	BASEMENT	clubhouse		Negative	< LOD
30	7/5/2022 11:05	WALL	DRYWALL	A	INTACT	BEIGE	BASEMENT	clubhouse	workroom	Negative	< LOD
31	7/5/2022 11:06	WALL	DRYWALL	B	INTACT	BEIGE	BASEMENT	clubhouse	workroom	Negative	< LOD
32	7/5/2022 11:06	WALL	DRYWALL	C	INTACT	BEIGE	BASEMENT	clubhouse	workroom	Negative	< LOD
33	7/5/2022 11:06	WALL	DRYWALL	D	INTACT	BEIGE	BASEMENT	clubhouse	workroom	Negative	< LOD

Reading No	Time	Component	Substrate	Side	Condition	Color	Floor	Room	Misc 1	Results	Pb
34	7/5/2022 11:06	WALL	DRYWALL	D	INTACT	BEIGE	BASEMENT	clubhouse	workroom	Negative	< LOD
35	7/5/2022 11:07	WALL	DRYWALL	D	INTACT	BEIGE	BASEMENT	clubhouse	workroom	Negative	< LOD
36	7/5/2022 11:07	BASEBOARD	WOOD	D	INTACT	WHITE	BASEMENT	clubhouse	workroom	Negative	< LOD
37	7/5/2022 11:07	DOOR	WOOD	C	INTACT	WHITE	BASEMENT	clubhouse	workroom	Negative	< LOD
38	7/5/2022 11:07	TRIM	WOOD	C	INTACT	WHITE	BASEMENT	clubhouse	workroom	Negative	< LOD
39	7/5/2022 11:08	CEILING	DRYWALL		INTACT	WHITE	BASEMENT	clubhouse	workroom	Negative	< LOD
40	7/5/2022 11:10	WALL	DRYWALL	A	INTACT	gray		gym		Negative	< LOD
41	7/5/2022 11:10	WALL	DRYWALL	B	INTACT	BLUE		gym		Negative	< LOD
42	7/5/2022 11:10	WALL	DRYWALL	C	INTACT	gray		gym		Negative	< LOD
43	7/5/2022 11:11	WALL	DRYWALL	D	INTACT	WHITE		gym		Negative	< LOD
44	7/5/2022 11:11	TRIM	WOOD	D	INTACT	WHITE		gym		Negative	< LOD
45	7/5/2022 11:11	COLUMN	DRYWALL		INTACT	WHITE		gym		Negative	< LOD
46	7/5/2022 11:13	siding	WOOD	A	INTACT	YELLOW		gym	exterior	Negative	< LOD
47	7/5/2022 11:15	stringer	WOOD		INTACT	WHITE	BASEMENT	clubhouse		Negative	< LOD
48	7/5/2022 11:16	WALL	DRYWALL	A	INTACT	BEIGE	FIRST	office		Negative	< LOD
49	7/5/2022 11:16	WALL	DRYWALL	B	INTACT	BEIGE	FIRST	office		Negative	< LOD
50	7/5/2022 11:16	WALL	DRYWALL	C	INTACT	BEIGE	FIRST	office		Negative	< LOD
51	7/5/2022 11:17	WALL	DRYWALL	D	INTACT	BEIGE	FIRST	office		Negative	< LOD
52	7/5/2022 11:17	WINDOW	WOOD	D	INTACT	WHITE	FIRST	office		Negative	< LOD
53	7/5/2022 11:17	BASEBOARD	WOOD	D	INTACT	WHITE	FIRST	office		Negative	< LOD
54	7/5/2022 11:17	DOOR	WOOD	C	INTACT	WHITE	FIRST	office		Negative	< LOD
55	7/5/2022 11:17	TRIM	WOOD	C	INTACT	WHITE	FIRST	office		Negative	< LOD
56	7/5/2022 11:19	WALL	DRYWALL	A	INTACT	WHITE		gym restroom		Negative	< LOD
57	7/5/2022 11:20	WALL	DRYWALL	B	INTACT	WHITE		gym restroom		Negative	< LOD
58	7/5/2022 11:20	WALL	DRYWALL	C	INTACT	WHITE		gym restroom		Negative	< LOD
59	7/5/2022 11:20	WALL	DRYWALL	D	INTACT	WHITE		gym restroom		Negative	< LOD
60	7/5/2022 11:20	DOOR	WOOD	B	INTACT	WHITE		gym restroom		Negative	< LOD
61	7/5/2022 11:20	TRIM	WOOD	B	INTACT	WHITE		gym restroom		Negative	< LOD
62	7/5/2022 11:21	CEILING	DRYWALL		INTACT	WHITE		gym restroom		Null	< LOD
63	7/5/2022 11:21	CEILING	DRYWALL		INTACT	WHITE		gym restroom		Negative	< LOD
64	7/5/2022 11:23	WALL	DRYWALL	A	INTACT	gray		bike storage		Negative	< LOD
65	7/5/2022 11:23	CEILING	DRYWALL		INTACT	gray		bike storage		Negative	< LOD
66	7/5/2022 11:23	DOOR	WOOD	A	INTACT	WHITE		bike storage		Negative	< LOD

Lead-Based Paint Inspection XRF Data
Inspection Date: 07/05/2022

Reading No	Time	Component	Substrate	Side	Condition	Color	Floor	Room	Misc 1	Results	Pb
67	7/5/2022 11:23	TRIM	WOOD	A	INTACT	WHITE		bike storage		Negative	< LOD
68	7/5/2022 11:24	WALL	CONCRETE	A	INTACT	YELLOW		bike storage	ext	Negative	< LOD
69	7/5/2022 11:25	DOOR	WOOD	A	INTACT	BROWN		bike storage	ext	Negative	< LOD
70	7/5/2022 11:26	stringer	WOOD	D	INTACT	YELLOW		clubhouse		Negative	< LOD

Reading No	Time	Component	Substrate	Side	Condition	Color	Unit	Room	Results	PbC
1	10/21/2022 6:16									2.17
2	10/21/2022 6:42	NIST STANDARD				RED			Negative	0.9
3	10/21/2022 6:44	NIST STANDARD				RED			Null	<LOD
4	10/21/2022 6:45	NIST STANDARD				RED			Positive	1.1
5	10/21/2022 7:01	NIST STANDARD				RED			Positive	1
6	10/21/2022 7:02	NIST STANDARD				RED			Positive	1.1
7	10/21/2022 7:02	NIST STANDARD				RED			Null	1
8	10/21/2022 8:56	NIST STANDARD	WOOD	C	INTACT	YELLOW			Negative	<LOD
9	10/21/2022 8:57	FACIA	WOOD	C	INTACT	YELLOW	F2	DECK	Negative	<LOD
10	10/21/2022 8:58	SOFIT	WOOD	C	INTACT	YELLOW	F2	DECK	Negative	<LOD
11	10/21/2022 8:59	SOFIT	WOOD	C	INTACT	YELLOW	F2	DECK	Negative	<LOD
12	10/21/2022 9:08	SOFIT	WOOD	C	INTACT	YELLOW	F08	DECK	Negative	<LOD
13	10/21/2022 9:09	FACIA	WOOD	C	INTACT	YELLOW	F08	DECK	Negative	<LOD
14	10/21/2022 9:16	STRINGER	WOOD	A	INTACT	YELLOW	F	STAIRS	Negative	<LOD
15	10/21/2022 9:20	STRINGER	WOOD	A	INTACT	YELLOW	G	STAIRS	Negative	<LOD
16	10/21/2022 9:23	STRINGER	WOOD	A	INTACT	YELLOW	G	STAIRS	Negative	<LOD
17	10/21/2022 9:24	SOFIT	WOOD	C	INTACT	YELLOW	G12	DECK	Negative	<LOD
18	10/21/2022 9:24	FACIA	WOOD	C	INTACT	YELLOW	G12	DECK	Negative	<LOD
19	10/21/2022 9:29	STRINGER	WOOD	A	INTACT	YELLOW	I	STAIRS	Negative	<LOD
20	10/21/2022 9:32	SOFIT	WOOD	C	INTACT	YELLOW	I13	DECK	Negative	<LOD
21	10/21/2022 9:32	FACIA	WOOD	C	INTACT	YELLOW	I13	DECK	Negative	<LOD
22	10/21/2022 9:34	CEILING	DRYWALL		INTACT	WHITE	I13	KITCHEN	Negative	<LOD
23	10/21/2022 9:35	WALL	DRYWALL	A	INTACT	WHITE	I13	KITCHEN	Negative	<LOD
24	10/21/2022 9:35	WALL	DRYWALL	B	INTACT	WHITE	I13	KITCHEN	Negative	<LOD
25	10/21/2022 9:36	WALL	DRYWALL	C	INTACT	WHITE	I13	KITCHEN	Negative	<LOD
26	10/21/2022 9:36	WALL	DRYWALL	D	INTACT	WHITE	I13	KITCHEN	Negative	<LOD
27	10/21/2022 9:37	CEILING	DRYWALL		INTACT	WHITE	I13	LIVING ROOM	Negative	<LOD
28	10/21/2022 9:38	WALL	DRYWALL	A	INTACT	WHITE	I13	LIVING ROOM	Negative	<LOD
29	10/21/2022 9:39	WALL	DRYWALL	B	INTACT	WHITE	I13	LIVING ROOM	Negative	<LOD
30	10/21/2022 9:39	WALL	DRYWALL	C	INTACT	WHITE	I13	LIVING ROOM	Negative	<LOD
31	10/21/2022 9:40	WALL	DRYWALL	D	INTACT	WHITE	I13	LIVING ROOM	Negative	<LOD
32	10/21/2022 9:41	SLIDING DOOR FRAME	WOOD	C	INTACT	WHITE	I13	LIVING ROOM	Negative	<LOD
33	10/21/2022 9:42	WINDOW SILL	WOOD	C	INTACT	WHITE	I13	LIVING ROOM	Negative	<LOD
34	10/21/2022 9:44	COVEBASE	WOOD	A	INTACT	WHITE	I13	LIVING ROOM	Negative	<LOD
35	10/21/2022 9:45	COVEBASE	WOOD	B	INTACT	WHITE	I13	LIVING ROOM	Negative	<LOD
36	10/21/2022 9:45	COVEBASE	WOOD	C	INTACT	WHITE	I13	LIVING ROOM	Negative	<LOD
37	10/21/2022 9:46	COVEBASE	WOOD	D	INTACT	WHITE	I13	LIVING ROOM	Negative	<LOD
38	10/21/2022 9:48	CEILING	DRYWALL		INTACT	TAN	I13	BATHROOM	Negative	<LOD
39	10/21/2022 9:49	WALL	DRYWALL	A	INTACT	TAN	I13	BATHROOM	Negative	<LOD
40	10/21/2022 9:49	WALL	DRYWALL	B	INTACT	TAN	I13	BATHROOM	Negative	<LOD
41	10/21/2022 9:49	WALL	DRYWALL	C	INTACT	TAN	I13	BATHROOM	Negative	<LOD
42	10/21/2022 9:50	WALL	DRYWALL	D	INTACT	TAN	I13	BATHROOM	Negative	<LOD

43	10/21/2022 9:50	DOOR	WOOD	A	INTACT	WHITE	I13	BATHROOM	Negative	<LOD
44	10/21/2022 9:51	DOOR FRAME	WOOD	A	INTACT	WHITE	I13	BATHROOM	Negative	<LOD
45	10/21/2022 9:52	COVEBASE	WOOD	B	INTACT	WHITE	I13	BATHROOM	Negative	<LOD
46	10/21/2022 9:52	COVEBASE	WOOD	C	INTACT	WHITE	I13	BATHROOM	Negative	<LOD
47	10/21/2022 9:54	CEILING	DRYWALL		INTACT	WHITE	I13	BEDROOM 1	Negative	<LOD
48	10/21/2022 9:55	WALL	DRYWALL	A	INTACT	WHITE	I13	BEDROOM 1	Negative	<LOD
49	10/21/2022 9:56	WALL	DRYWALL	B	INTACT	WHITE	I143	BEDROOM 1	Negative	<LOD
50	10/21/2022 9:56	WALL	DRYWALL	C	INTACT	WHITE	I13	BEDROOM 1	Negative	<LOD
51	10/21/2022 9:58	WINDOW SIL	WOOD	A	INTACT	WHITE	I13	BEDROOM 1	Negative	<LOD
52	10/21/2022 9:58	DOOR	WOOD	C	INTACT	WHITE	I13	BEDROOM 1	Negative	<LOD
53	10/21/2022 9:58	DOOR FRAME	WOOD	C	INTACT	WHITE	I13	BEDROOM 1	Negative	<LOD
54	10/21/2022 9:59	CLOSET ROLL DOOR	WOOD	C	INTACT	WHITE	I13	BEDROOM 1	Negative	<LOD
55	10/21/2022 10:00	CEILING	DRYWALL		INTACT	WHITE	I13	BEDROOM 2	Negative	<LOD
56	10/21/2022 10:01	WALL	DRYWALL	A	INTACT	WHITE	I13	BEDROOM 2	Negative	<LOD
57	10/21/2022 10:01	WALL	DRYWALL	B	INTACT	WHITE	I13	BEDROOM 2	Negative	<LOD
58	10/21/2022 10:02	WALL	DRYWALL	C	INTACT	WHITE	I13	BEDROOM 2	Negative	<LOD
59	10/21/2022 10:03	WALL	DRYWALL	D	INTACT	WHITE	I13	BEDROOM 2	Negative	<LOD
60	10/21/2022 10:04	WINDOW SILL	WOOD	A	INTACT	WHITE	I13	BEDROOM 2	Negative	<LOD
61	10/21/2022 10:05	DOOR	WOOD	C	INTACT	WHITE	I13	BEDROOM 2	Negative	<LOD
62	10/21/2022 10:06	DOOR FRAME	WOOD	C	INTACT	WHITE	I13	BEDROOM 2	Negative	<LOD
63	10/21/2022 10:07	CEILING	DRYWALL		INTACT	WHITE	I13	HALL	Negative	<LOD
64	10/21/2022 10:08	WALL	DRYWALL	A	INTACT	BEIGE	I13	HALL	Negative	<LOD
65	10/21/2022 10:08	WALL	DRYWALL	B	INTACT	BEIGE	I13	HALL	Negative	<LOD
66	10/21/2022 10:08	WALL	DRYWALL	C	INTACT	BEIGE	I13	HALL	Negative	<LOD
67	10/21/2022 10:09	WALL	DRYWALL	D	INTACT	BEIGE	I13	HALL	Negative	<LOD
68	10/21/2022 10:10	FRONT DOOR	WOOD	A	INTACT	WHITE	I13	HALL	Negative	<LOD
69	10/21/2022 10:10	FRONT DOOR FRAME	WOOD	A	INTACT	WHITE	I13	HALL	Negative	<LOD
70	10/21/2022 10:11	COVEBASE	WOOD	A	INTACT	WHITE	I13	HALL	Negative	<LOD
71	10/21/2022 10:11	COVEBASE	WOOD	B	INTACT	WHITE	I13	HALL	Negative	<LOD
72	10/21/2022 10:12	COVEBASE	WOOD	C	INTACT	WHITE	I13	HALL	Negative	<LOD
73	10/21/2022 10:12	COVEBASE	WOOD	D	INTACT	WHITE	I13	HALL	Negative	<LOD
74	10/21/2022 10:13	CLOSET ROLL DOOR	WOOD	B	INTACT	WHITE	I13	HALL	Negative	<LOD

Calibration Check Test Results

Address/Unit No. Carrington Apartment Homes, Exteriors

Device XRF Model XLP 300A Version 5.2.1

Date 3/25/22 **XRF Serial No.** 102877

Contractor PBS Engineering and Environmental

NIST SRM Used 2573 **mg/cm2** **Calibration Check Tolerance Used** _____ **mg/cm2**

First Calibration Check

NIST SRM			First Average	Difference Between First Average and NIST SRM*
First Reading	Second Reading	Third Reading		
0.9	1.0	0.9	0.9	

Second Calibration Check

NIST SRM			First Average	Difference Between First Average and NIST SRM*
First Reading	Second Reading	Third Reading		

Third Calibration Check ***(if required)***

NIST SRM			First Average	Difference Between First Average and NIST SRM*
First Reading	Second Reading	Third Reading		

Fourth Calibration Check ***(if required)***

NIST SRM			First Average	Difference Between First Average and NIST SRM*
First Reading	Second Reading	Third Reading		

*** If the difference of the Calibration Check Average from the NIST SRM film value is greater than the specified Calibration Check Tolerance for this device, consult the manufacturer's recommendations to bring the instrument back into control. Retest all testing combinations tested since the last successful Calibration Check test.**

Calibration Check Test Results

Address/Unit No. Carrington Apartment Homes, Interior

Device XRF Model XLP 300A Version 5.2.1

Date 6/16/22 **XRF Serial No.** 102877

Contractor PBS Engineering and Environmental

NIST SRM Used 2573 **mg/cm2** **Calibration Check Tolerance Used** _____ **mg/cm2**

First Calibration Check

NIST SRM			First Average	Difference Between First Average and NIST SRM*
First Reading	Second Reading	Third Reading		
1.1	0.9	1.1	1.03	

Second Calibration Check

NIST SRM			First Average	Difference Between First Average and NIST SRM*
First Reading	Second Reading	Third Reading		
1	1.1	0.7	0.93	

Third Calibration Check ***(if required)***

NIST SRM			First Average	Difference Between First Average and NIST SRM*
First Reading	Second Reading	Third Reading		

Fourth Calibration Check ***(if required)***

NIST SRM			First Average	Difference Between First Average and NIST SRM*
First Reading	Second Reading	Third Reading		

*** If the difference of the Calibration Check Average from the NIST SRM film value is greater than the specified Calibration Check Tolerance for this device, consult the manufacturer's recommendations to bring the instrument back into control. Retest all testing combinations tested since the last successful Calibration Check test.**

Calibration Check Test Results

Address/Unit No. Carrington Apartment Homes, Interior

Device XRF Model XLP 300A Version 5.2.1

Date 6/20/22 **XRF Serial No.** 102877

Contractor PBS Engineering and Environmental

NIST SRM Used 2573 **mg/cm2** **Calibration Check Tolerance Used** _____ **mg/cm2**

First Calibration Check

NIST SRM			First Average	Difference Between First Average and NIST SRM*
First Reading	Second Reading	Third Reading		
0.7	1	1	0.9	

Second Calibration Check

NIST SRM			First Average	Difference Between First Average and NIST SRM*
First Reading	Second Reading	Third Reading		
1.1	1	0.9	1	

Third Calibration Check ***(if required)***

NIST SRM			First Average	Difference Between First Average and NIST SRM*
First Reading	Second Reading	Third Reading		

Fourth Calibration Check ***(if required)***

NIST SRM			First Average	Difference Between First Average and NIST SRM*
First Reading	Second Reading	Third Reading		

*** If the difference of the Calibration Check Average from the NIST SRM film value is greater than the specified Calibration Check Tolerance for this device, consult the manufacturer's recommendations to bring the instrument back into control. Retest all testing combinations tested since the last successful Calibration Check test.**

Calibration Check Test Results

Address/Unit No. Carrington Apartment Homes, Interior

Device XRF Model XLP 300A Version 5.2.1

Date 6/23/22 **XRF Serial No.** 102877

Contractor PBS Engineering and Environmental

NIST SRM Used 2573 **mg/cm2** **Calibration Check Tolerance Used** _____ **mg/cm2**

First Calibration Check

NIST SRM			First Average	Difference Between First Average and NIST SRM*
First Reading	Second Reading	Third Reading		
0.9	0.9	0.8	0.86	

Second Calibration Check

NIST SRM			First Average	Difference Between First Average and NIST SRM*
First Reading	Second Reading	Third Reading		

Third Calibration Check ***(if required)***

NIST SRM			First Average	Difference Between First Average and NIST SRM*
First Reading	Second Reading	Third Reading		

Fourth Calibration Check ***(if required)***

NIST SRM			First Average	Difference Between First Average and NIST SRM*
First Reading	Second Reading	Third Reading		

*** If the difference of the Calibration Check Average from the NIST SRM film value is greater than the specified Calibration Check Tolerance for this device, consult the manufacturer's recommendations to bring the instrument back into control. Retest all testing combinations tested since the last successful Calibration Check test.**

Calibration Check Test Results

Address/Unit No. Carrington Apartment Homes; Clubhouse, Office, Gym, Bike Storage

Device XRF Model XLP 300A Version 5.2.1

Date 7/5/22 **XRF Serial No.** 102877

Contractor PBS Engineering and Environmental

NIST SRM Used 2573 **mg/cm2** **Calibration Check Tolerance Used** _____ **mg/cm2**

First Calibration Check

NIST SRM			First Average	Difference Between First Average and NIST SRM*
First Reading	Second Reading	Third Reading		
1.2	0.9	0.9	1	

Second Calibration Check

NIST SRM			First Average	Difference Between First Average and NIST SRM*
First Reading	Second Reading	Third Reading		

Third Calibration Check ***(if required)***

NIST SRM			First Average	Difference Between First Average and NIST SRM*
First Reading	Second Reading	Third Reading		

Fourth Calibration Check ***(if required)***

NIST SRM			First Average	Difference Between First Average and NIST SRM*
First Reading	Second Reading	Third Reading		

*** If the difference of the Calibration Check Average from the NIST SRM film value is greater than the specified Calibration Check Tolerance for this device, consult the manufacturer's recommendations to bring the instrument back into control. Retest all testing combinations tested since the last successful Calibration Check test.**

Calibration Check Test Results

Address/Unit No. SE 24th Street
Bellevue WA

Device Niton XRF Portable Analyzer

Date 10/21/22 XRF Serial No. 11714

Contractor PBS Engineering and Environmental

NIST SRM Used SRM 2573 mg/cm2 Calibration Check Tolerance Used 1.04 ± 0.06 mg/cm2

First Calibration Check

NIST SRM			First Average	Difference Between First Average and NIST SRM*
First Reading 2	Second Reading 3	Third Reading 4		
0.9	0.9	1.1	0.96	0.08
neg	neg	pos		

Second Calibration Check

NIST SRM			First Average	Difference Between First Average and NIST SRM*
First Reading 5	Second Reading 6	Third Reading		
1.0	1.1	1.	1.03	0.01
pos	pos	Null		

Third Calibration Check *(if required)*

NIST SRM			First Average	Difference Between First Average and NIST SRM*
First Reading	Second Reading	Third Reading		

Fourth Calibration Check *(if required)*

NIST SRM			First Average	Difference Between First Average and NIST SRM*
First Reading	Second Reading	Third Reading		

* If the difference of the Calibration Check Average from the NIST SRM film value is greater than the specified Calibration Check Tolerance for this device, consult the manufacturer's recommendations to bring the instrument back into control. Retest all testing combinations tested since the last successful Calibration Check test.

The Carrington APARTMENT HOMES

2501 148th Avenue SE • Bellevue, Washington 98007
Telephone: (425) 643-4663 • Fax: (425) 643-0689
Email: thecarrington@qwest.net

TAB 2

Certifications

STATE OF WASHINGTON

Department of Commerce

Lead-Based Paint Abatement Program

Kaitlin Soukup

Has fulfilled the certification requirements of
WAC 365-230
and has been certified to conduct lead-based
paint activities as a
Risk Assessor

Certification #	Issuance Date	Expiration Date
7192	04/08/2021	04/09/2024

STATE OF WASHINGTON

Department of Commerce

Lead-Based Paint Abatement Program

Janet J Murphy

Has fulfilled the certification requirements of
WAC 365-230
and has been certified to conduct lead-based
paint activities as a
Risk Assessor

Certification #	Issuance Date	Expiration Date
0258	12/22/2021	03/08/2025

STATE OF WASHINGTON

Department of Commerce

Lead-Based Paint Abatement Firm

PBS Engineering & Environmental Inc.

Has fulfilled the certification requirements of
WAC 365-230
and has been certified to conduct lead-based
paint activities.

Certification #	Issuance Date	Expiration Date
178	01/06/2020	09/03/2022

STATE OF WASHINGTON

Department of Commerce

Lead-Based Paint Abatement Firm

PBS Engineering & Environmental Inc.

Has fulfilled the certification requirements of
WAC 365-230
and has been certified to conduct lead-based
paint activities.

Certification #	Issuance Date	Expiration Date
178	09/12/2022	09/03/2025